A Higher Level of Performance

Manual

Sultan

Sonar System

Sludge and Submerged Interface Level Measurement



For more information, please visit >

www.hawkmeasurement.com

Contents

Overview 3
Principle of Operation 3
Benefits 3
Features 3

System Components & Wiring 4
Impact Plate Auto Scum Cleaner 4
AWR234 Wiring 4
AWR234 Amplifier 4
AWRTS Transducer 4

Dimensions 5
AWR234 Remote Amplifier 5
Remote Transducer 5
Impact Plate 5

Dimensions & Mounting Connection 6
Impact Plate Mounting Connection 6

Mounting & Hardware Assembly 7
Impact Plate Assembly 7
*A: Important Cabling Steps to Follow 7

Mounting 8
Transducer Submersion 8

Setup Procedure 9
Powering The Unit 9
Quickset 10
Interface Table 10
Typical High & Low Level 10
Output Adjustment 11
Comms Type 11

Relay Actions 12
Relay Actions 12

Setup Procedure 13
Advanced 13
(1) Gain4 default settings 13

Operating Diagnostics 14
Operating State 14

Communications 15
Modbus 15
HART 16
Profibus PA / Foundation Fieldbus 16
DeviceNet 17
Profibus DP 18

Troubleshooting 19
Unit is measuring incorrect depth or height 19
Error Codes 01 - 04 19
PLC indication does not match measurement 19
Error Codes 08 - 11 & 13 20
Unit Specs & Checks 20

Part Numbering 21
Amplifier 21
Remote Sonar Transducer 22
Scum Cleaner 22
Accessories 23

Specifications 24

Principle of Operation

The HAWK Sultan Sonar uses state of the art Sonar technology to measure and control Waste Water Clarifiers and Thickeners.

The system is easy to use and the innovative design provides critical plant control to optimize performance. In the water, wastewater industry process conditions will vary greatly between a primary sedimentation tank, secondary / final clarifier and a gravity thickener. Thickener bed levels, secondary RAS blanket, flocculent blanket etc, all have different densities and the water above these interface levels are subject to different process conditions that change.

To optimize performance in each interface application under all process environments:

HAWK has developed a low frequency transducer to penetrate through the suspended solids and capable of measuring the lightest floc using one single transducer.

To optimize performance under all process environments in each interface application:

HAWK uses one transducer with a frequency and power level that is applicable to the density of the interface and process conditions expected in the tank. Also, HAWK can guarantee performance for controlling pumps etc, rather than for monitoring purposes only.

Benefits

- Improved efficiency and control of the treatment process
- Fully automated plant systems with reliable blanket level monitoring
- Advanced warning of biological upset or hydraulic in-balance
- Reduced maintenance with 5 year cleaning mechanism warranty (no blades to replace)
- Reduced site operational costs significantly with improved process control
- Improved health and safety on site (no manual dips required).

Features

- Simple and easy calibration to track specific densities
- Tune Sensor to 5 preset factory densities or fine tune to the required density in-situ
- Sonar transducer developed to optimize detection of heavy and light density interfaces
- Easy calibration to track specific density interfaces, eg: RAS blanket - 4g/l, floc / fluff layer - 1g/l, Bed 10g/l+
- Industrial scum cleaning mechanisms that do not require maintenance
- No wiper blade assemblies
- Wide range of communications: Modbus, HART, Foundation Fieldbus, DeviceNet, Profibus DP and Profibus PA
- 3G remote support capability for calibration, commissioning or technical back-up from HAWK Service Engineer
- 5 Relay alarms
- 1640 feet (500 metre) separation possible between transducer and Sultan Sonar transmitter.

Impact Plate Auto Scum Cleaner



AWR234 Amplifier



AWRTS Transducer



AWR234 Wiring

Inputs model dependant

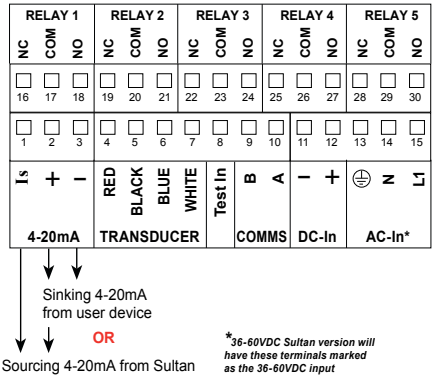

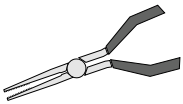

Use long nose pliers to extract terminals

AWR234 Remote Amplifier

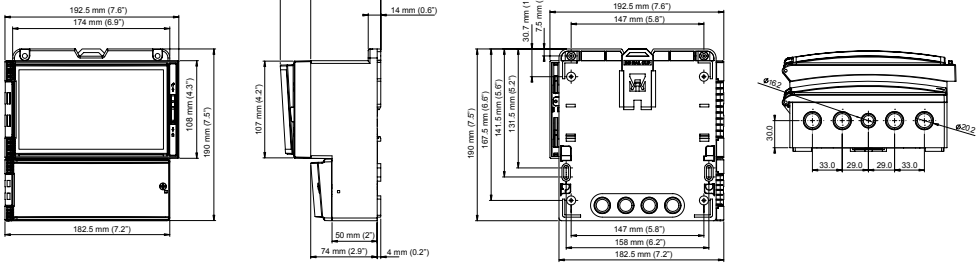

Remote Transducer

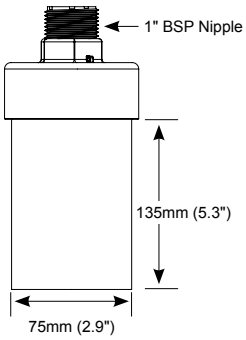

Impact Plate

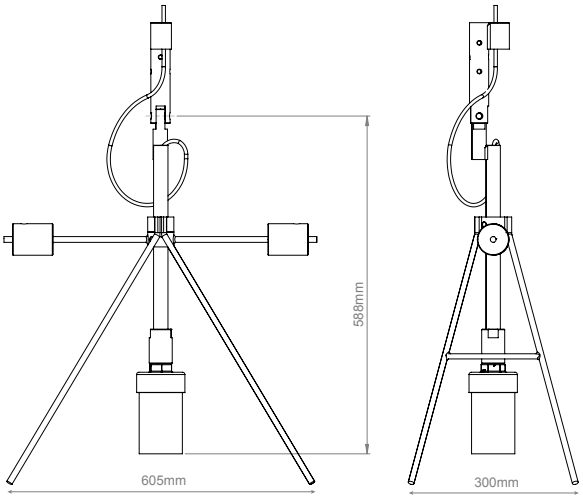

Impact Plate Mounting Connection

The top of the Impact Plate has 3 x 7mm bolt holes which can be secured to an angle iron or equivalent bracket. There is also a M25 (1.5") threaded connection for a mounting pole connection. The Impact Plate is designed to swing parallel with the counter weights. The surface sweeper must come in contact with the legs of the Impact Plate which swings the bracket lifting the transducer out of the liquid. When the sweeper has cleared, it will drop back in and use the counter weights to re-center. The force of the movement will clear the sensor face of any build up

Impact Plate Connection Point

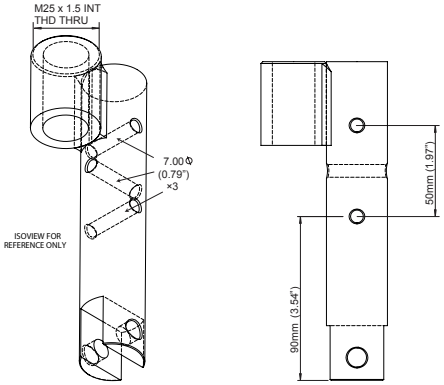

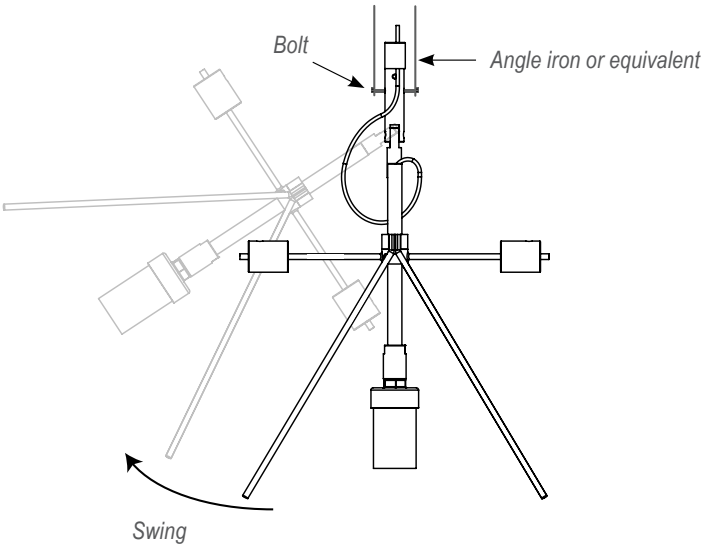

Impact Plate Assembly

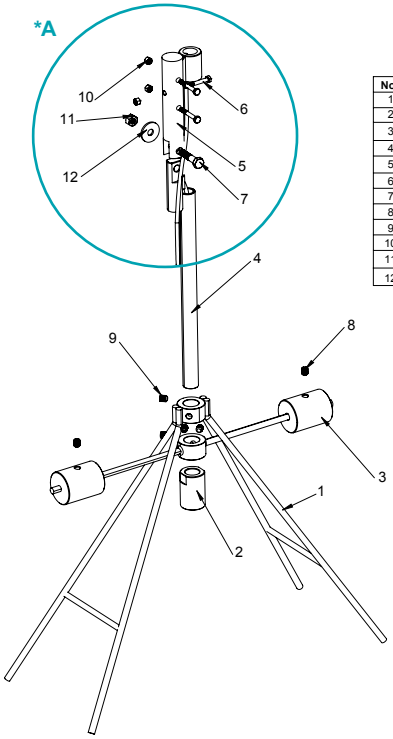

No.	Description	QTY.
1	Impact Plate Dual Direction	1
2	Sonar Pole Adaptor	1
3	Impact Plate Counter Balance	1
4	Sonar Male Clevis Assembly	1
5	Sonar Female Clevis Assembly	1
6	M6×45 Stainless Steel Bolt	3
7	M10×40 Stainless Steel Bolt	1
8	M10×12 Stainless Steel Set Screw	4
9	M10×20 Stainless Steel Set Screw	2
10	M6 Stainless Steel Nut	3
11	M10 Stainless Steel Nyloc Nut	1
12	M10 Stainless Steel Washer	1

*A: Important Cabling Steps to Follow

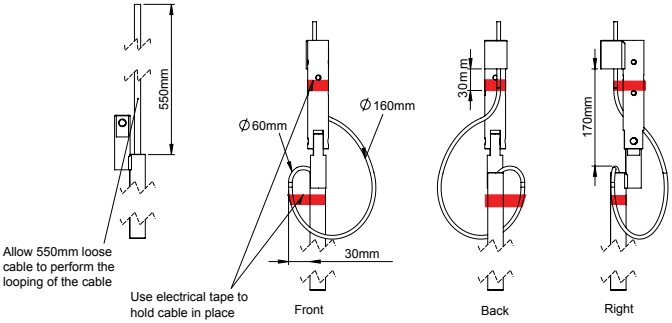

Transducer Submersion

- The transducer should be half submerged in the liquid and mounted 1/3rd radius from the feedwell to the launder
- Avoid mounting in the proximity of a feedwell.
- Impact Plate must make contact with surface sweeper

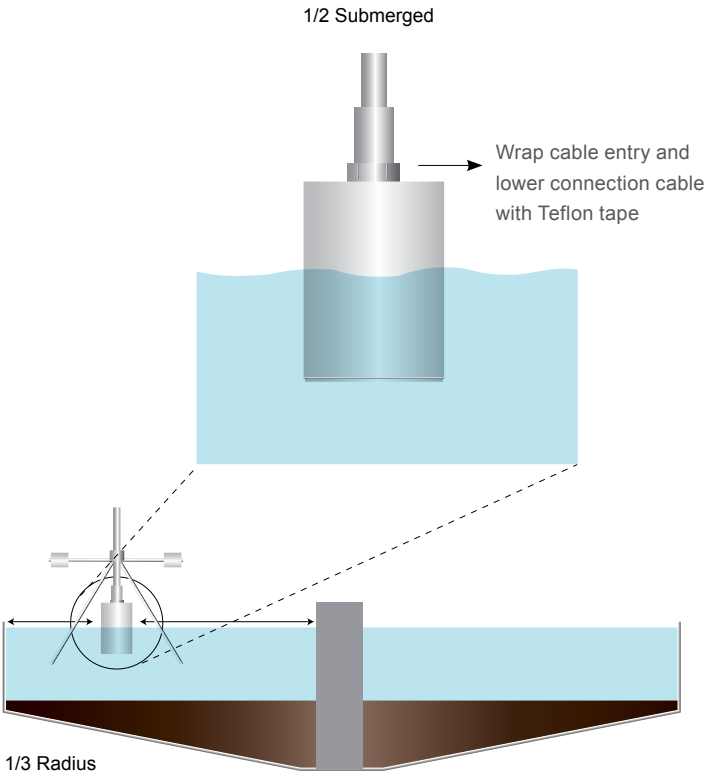

Powering The Unit

When power is applied the unit will start up automatically. It will scroll through its boot diagnostics and display the serial numbers, software version and model types for the amplifier and transducer

The unit will display its default operating screen ‘Height’ or ‘Depth’ with a measurement. The unit will re-scan for the level whenever it is powered up.

The sensor face must be submerged in liquid in order to operate correctly.

CAL	CAL for select / proceed / edit
▲ ▼	Arrows to scroll / adjust
RUN	RUN to re-active unit

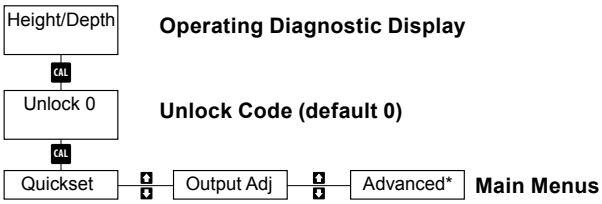

Amplifier / Application settings

Comms / Output Settings

Transducer settings.

**Do not adjust Advanced settings without expert knowledge*

Quickset

The **Quickset** menu contains the basic parameters required to get the unit up and running.
It is one of the three main menu options in the internal software.

Parameter	Description	Options			
Unit	Adjust displayed measurement unit	Inches	Feet	Meters	Centimeters
Low Level	Set Low level measurement point (4mA)	Adjustable			
High Level	Set High level measurement point (20mA)	Adjustable			
Blanking	Non-Measured zone	Adjustable (recommended default 350mm)			
Damping	Adjust output response time & smoothness	Adjustable			
Failsafe	Set failsafe output & timer	20mA	4mA	LastKnown	20.20mA
DispMode	Set LCD measurement display mode	Height	Depth		
Interface	Select preferred interface density	Adjustable grams per liter (see Interface Table			
Fine Adj	• Manually fine tune sensor for required density • Higher value for lighter densities • Press CAL to fire a test pulse which will return the depth measurement.	Adjustable			

Interface Table

Interface g/l	Typical Applications	
0.1 - 0.6	Lighter layers	
0.6 - 1.2	Hindered layer	Settling layer
1.2 - 3.0	RAS	
3.0 to 6.0	RAS	Bed
6 to 10	Bed	
10+	Bed / Heavy sludge	

• After selecting Interface pre-set you can also use ‘Fine Adj’ to fine tune calibration.

• Fire several test pulses to attain a good sample size.

• If ‘Fine Adj’ is reduced to 0%, select a lighter Density

Typical High & Low Level

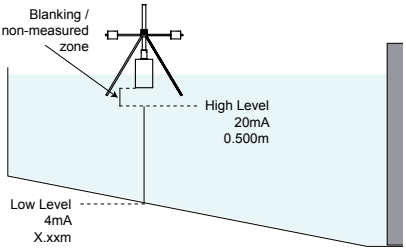

Typical installation - Set ‘Low Level’ (4mA) to be the distance from the transducer face to the bottom of the tank. High Level should be 0.500m for most accurate and reliable measurement.

Output Adjustment

The Output Adj menu contains parameters related to adjusting analogue, switch & communication protocol relayed settings.

Parameter	Description	Options				
4mA Adj	Fine tune the 4mA output current	Adjustable				
20mA Adj	Fine tune the 20mA output current	Adjustable				
Analog	Invert analogue from 4-20mA to 20-4mA	4-20mA	20-4mA			
Simulate	A simulated distance reading is transmitted as analogue (distance measured from sensor face)	Adjustable				
Comm Type	• Adjust communication protocol settings. • Standard Analogue and Switch models include Modbus as default.	Modbus*	HART*	Profibus (DP)*	DeviceNet*	FF/ PA*
RlyMod 1-5	Configure Relay actions	De-energise**	Energise**	Failsafe**	Off**	
Bk Light	Turn LCD back light on or off	On / Off				
V in Chk	V in Chk will trigger failsafe relay if voltage supply to the unit falls below minimum requirement.	On / Off				

**See 'Comms Type* ***See 'Relay Actions'*

Comms Type

Sub-Menu	Description	Options
DeviceID	Adjust unit device ID for Modbus, HART, Profibus DP	1-255
FBusAdd	Adjust unit Device ID for FF/PA, DeviceNet	1-255
BaudRate	Adjust comms network speed	Comms dependant

Relay Actions

Sub-Menu	Description	Options
RlyL1 1-5	Adjust Relay switch point (L1 must be < L2)	Adjustable
RlyL2 1-5	Adjust Relay switch point (L2 must be > L1)	Adjustable

Set Relay Parameters in Output Adjustment menu

The two relay levels are RlyL1 and RlyL2

The display will show RlyL1 1, the last 1 indicated the Relay number (eg 1 to 5)

L1 and L2 distances are measured from the transducer face

L1 must be equal to or less than L2.

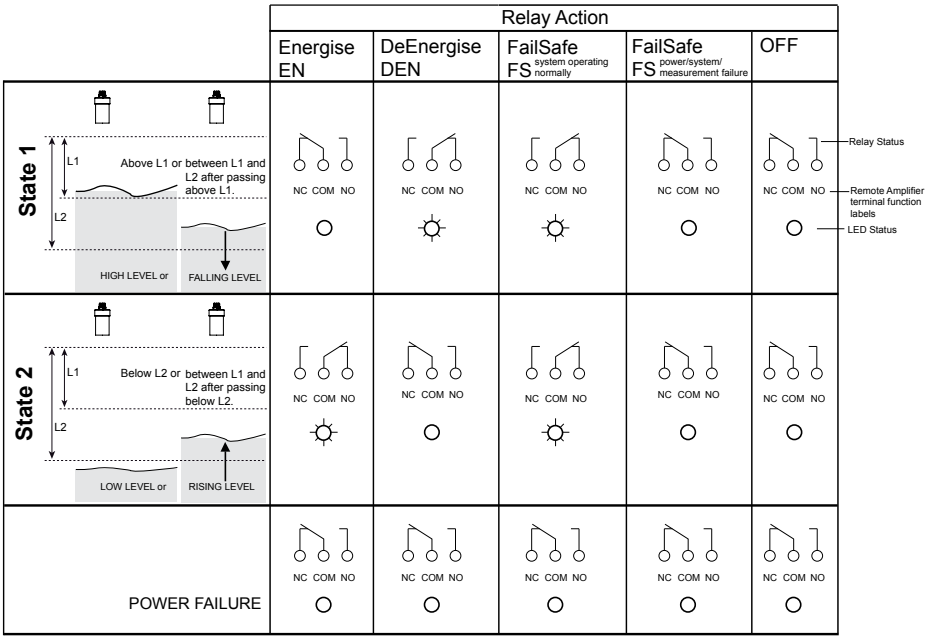

Advanced

The Advanced menu contains parameters for Gain control, manually adjustment of speed of sound, offset and restoring the amplifier and transducer to their default state.

These settings typically do not require adjustment unless there are special circumstances. Do not adjust Advanced settings without expert knowledge or consulting your local representation.

Parameter	Description	Options
Gain4	Primary sensitivity adjustment. This value is automatically(1) set by the selected Interface range in Quickset. Higher values for lighter densities.	Adjustable
GainStep3	Adjustment of sensitivity for DistStep3 zone.	Adjustable
DistStep3	Depth of zone measured from the sensor face for non-variable GainStep3.	Adjustable
Threshold	Minimum echo size which the unit will accept as a valid echo	Adjustable
EmptyDist	Unit will not consider any echoes beyond this distance valid. This is automatically calculated by the 'Low Level' parameter.	Adjustable
Temp Trim	Create manual measurement offset for a specific temperature.	Adjustable
Dist Trim	Create manual measurement offset for a specific distance.	Adjustable
Velocity	Adjusts the internal speed of sound calculation. 1.0000 is speed of sound through water	Adjustable

(1) Gain4 default settings

Interface Selected (g/l)	Default Value
0.1 - 0.6	24.9%
0.6-1.2	14.9%
1.2-3.0	10.0%
3.0-6.0	4.9%
6.0-10.0	2.0%
10+	1.1%

Operating State

In this operational state you can use the  buttons to navigate through and view unit diagnostics and other measurements.

Diagnostic	Typical Reading	Description
Bed	Distance	Bed indicates Bed height measured from Low Level
Level		Depth indicates depth of measured Density measured from the transducer face
Bed%	%	
Tx	1	Transducer 1
Normal	Distance	Unit is operating normally
Recover		Unit is searching for new signal
Failed		Unit is in failsafe mode
W (down)	Distance	Tracking Window end point (measured from sensor face)
W (up)	Distance	Tracking Window start point (measured from sensor face)
T:	23.8	Measured Temperature
N:	0.00%	Noise (electrical and frequency interference)
R:	0.00%	Current Recover Gain added
G:	44.6%	Total amount of Gain applied to track current echo
S:	2.49V	Signal size in Volts
E:	Distance	Non-damped measured distance measured from sensor face down

Modbus

Protocol: Modbus RTU (2 wire)
Speed: 19200 Baud
Data bits: 8
Parity: None
Stop Bits: 1

HAWK Sultan series units act as 'slave' devices on a Modbus network.

Units are shipped from the factory with a default Modbus address of 1. The Modbus address of any unit can be changed individually if units are to be connected in a multi-drop network. Each address number must only be used once on any network (possible addresses are 1-255).

Diagnostic Block (Read Only): *Can be read as Singles or any Block wholly within the limits of this range of addresses*

40123 - LOW LEVEL span set point in mm
40124 - HIGH LEVEL span set point in mm
40125 - DISPLAYED DISTANCE (DISTANCE) in mm
40127 - NEW DISTANCE (E-DISTANCE) in mm
40128 - CONFIRM DISTANCE (C-DISTANCE) in mm
40129 - ECHO SIZE in Volts/102
40130 - GAIN at Echo detection point in %/7.5
40131 - NOT USED (Gain Limit)
40132 - RECOVER GAIN in %/7.5
40133 - NOISE in %/7.5
40134 - TEMPERATURE in Degrees K/10
((DegreesC - 273.2)/10)
40136 - CONFIRM COUNTER current value
40137 - HOLD COUNTER current value
40139 - WINDOW FORWARD POSITION in mm
40140 - WINDOW BACK POSITION in mm

Span Adjustment (Read/Write) **MUST** Read/Write SINGLES-NOT BLOCKS:

40012 - LOW LEVEL span set point in mm

40013 - HIGH LEVEL span set point in mm

Relay Function Adjustment (Read/Write) **MUST** Read/Write SINGLES-NOT BLOCKS:

40051 - Relay 1 Mode setting
0-OFF
1-FS (Failsafe)
2-EN (Energise on Level)
3-DEN (De-Energise on Level)

40052 - Relay 2 Mode setting (see Relay 1)

40053 - Relay 3 Mode setting (see Relay 1)

40054 - Relay 4 Mode setting (see Relay 1)

40055 - Relay 5 Mode setting (see Relay 1)

40035 - Relay 1 L1 set point in mm

40036 - Relay 1 L2 set point in mm

40037 - Relay 2 L1 set point in mm

40038 - Relay 2 L2 set point in mm

40039 - Relay 3 L1 set point in mm

40040 - Relay 3 L2 set point in mm

40041 - Relay 4 L1 set point in mm

40042 - Relay 4 L2 set point in mm

40043 - Relay 5 L1 set point in mm

40044 - Relay 5 L2 set point in mm

Modbus

Extended Parameters (Read/Write) ***MUST** Read/ Write SINGLES-NOT BLOCKS*:

40059 - DISPLAY UNITS
- 3-Millimetres
- 4-Centimetres
- 5-Metres
- 6-Feet
- 7-Inches

40014 - FAILSAFE MODE
- 0 - 3.5mA
- 1 - 3.8mA
- 2 - 20.2mA
- 3- Last Known
- 4 - 4.0mA
- 5 - 20.0mA

40015 - FAILSAFE TIME (seconds)

40016 - DENSITY SELECTION
- 1 - 0.1 - 0.6g/l
- 2 - 0.6 - 1.2g/l
- 3 - 1.2 - 3g/l
- 4 - 3.0 - 6.0g/l
- 5 - 6.0 - 10.0g/l
- 6 - 10.0+g/l

40019 - DISPLAY MODE
- 3 - Material %
- 4 - Height
- 5 - Depth

40032 - OFFSET (mm)

40020 - LOCK CODE

40021 - FILL DAMPING

40022 - EMPTY DAMPING

40063 - ANALOG
- 0 - 4-20mA (4mA low, 20mA high - standard)
- 1 - 20-4mA (20mA low, 4mA high - inverted)

40432 - Fine Adj in %/7.5

40447 - GAIN parameter setting in %/7.5

40448 - GAIN STEP in %/7.5

40449 - DISTANCE STEP (mm)

40450 - THRESHOLD in Volts/100

40451 - BLANKING (mm)

40452 - EMPTY DISTANCE (mm)

40452 - VELOCITY /10000

HART

Basic functions / commands only

PV Measurement
Measured Units
Analog Value
Percent Range
Upper Range Value
Lower Range Value
Damping

Profibus PA / Foundation Fieldbus

Foundation Fieldbus and Profibus PA have stand alone manuals located in the downloads-manuals section of **www.hawkmeasurement.com**

DeviceNet

Setting the Baud Rate and the DeviceNet Address

The DeviceNet factory default of Baud Rate and FBus Address are 125kbps and 63 in a Sultan unit with. To modify these values follow the instructions below.

1. Go to the '**Output Ad**' menu
2. Use the Up and Down push buttons to reach the CommType parameter
3. Make sure that the **CommType** is set to **'DeviceNet'**
4. Press the CAL button twice
5. DeviceID will be displayed - this ID is for Modbus networking, do not adjust.
6. Use the Down push button to reach the BaudRate parameter
7. The default value for the BaudRate is 125kpbs. Press CAL button and use the Up and Down push buttons to modify this value
8. Press CAL button when finished
9. Use the Down push button to reach the FBusAdds. The default value of the FieldBus Address is 63. Press CAL button and use the Up and Down push buttons to modify this value
10. Press CAL button again when finished
11. Press RUN to save and several times again to return the unit to operating mode.

Output Data

Profibus/DeviceNet now transmit 18 bytes/9 words, description of the words is as follows (For firmware version 5.54 and above).

1. Displayed Distance
   (Space Distance is the Primary Variable)
2. Percentage (Percent of Range)
3. Hi Level (Upper Range)
4. Low Level (Lower Range)
5. Status Flags

Bit0 = Echo was received inside the span.
Bit1 = Echo is Confirmed.
Bit3 = Searching is searching for an Echo.
BitF = Unit has Failed to detect an Echo.

6. Displayed Distance2 (Second/Differential Variable)
7. Percentage2 (Second/Differential Variable)

Integral

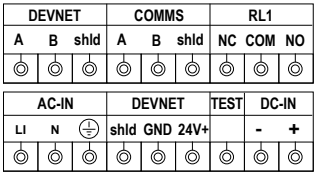

Remote

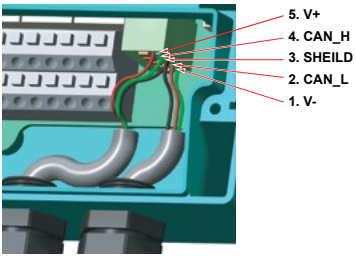

Bit F	Bit E	Bit 3		Bit 1	Bit 0
Failed	~~~~~	Search	0	Echo Cfm : 1 = , True, 0 = False	Echo R : 1 = , True, 0 = False

Profibus DP

Setting the Profibus DP Address

Factory defaults of FBusAdds is 126 in a Sultan unit with Profibus CommType. To modify this value follow the instruction below:

1. Go to the '**Output Ad**' menu
2. Use the Up and Down push buttons to reach the CommType parameter
3. Make sure that the **CommType** is set to '**Profibus**'
4. Press the CAL button twice
5. DeviceID will be displayed - this ID is for Modbus networking, do not adjust.
6. Use the Down push button to view the BaudRate parameter. The value for the BaudRate is selected automatically and can not be modified.
8. Use the Down push button to reach the FBusAdds. The default value of the FieldBus Address is 126. Press CAL button and use the Up and Down push buttons to modify this value.
9. Press CAL button again when finish.
10. Press RUN several times to return the unit to operating mode.

Output Data

DeviceNet now transmits 18 bytes/9 words, description of the words is as follows (For firmware version 5.54 and above)

1. Displayed Distance
   (Space Distance is the Primary Variable)
2. Percentage (Percent of Range)
3. Hi Level (Upper Range)
4. Low Level (Lower Range)
5. Status Flags

Bit0 = Echo was received inside the span.
Bit1 = Echo is Confirmed.
Bit3 = Searching is searching for an Echo.
BitF = Unit has Failed to detect an Echo.

6. Displayed Distance2 (Second Variable)*
7. Percentage2 (Second Percent of Range)*

**Used for Differential output*

Wiring

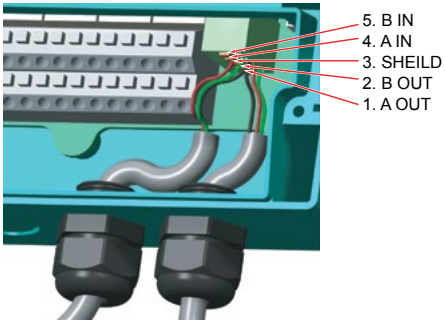

Unit is measuring incorrect depth or height

- Confirm display mode is correct (Depth is measured from sensor face to target. Height is measured from low level to target.
- Confirm High Level and Low Level match application requirement.
- Increase or decrease selected 'Density'. A higher Density value programs the unit to look for a more dense layer deeper.
- High volumes of poor settling or suspended material with attenuate the Sonar pulse. The unit may read higher tracking suspended material if process conditions in the tank fail.

PLC indication does not match measurement

- Disconnect the analogue wires from the amplifier. Use a multimeter on the 4-20mA terminals labeled IS and + to read the direct mA from the unit. Re-connected analogue wires and compare this value with the reading from the control system.
- Confirm High Level and Low Level are set to the same values in amplifier and control system.

Error Codes 01 - 04

Error 01

Amplifier/Transmitter can not communicate with transducer.

- Wiring: Check the terminals for a loose or incorrect connection (including junction box/cable extensions)
- Check the cables for any signs of damage
- Ensure any customer supplied cable meets HAWK specifications
- If using junction box extension trace the 8-10VDC from the red/black amplifier terminals to the transducer to ensure wires are correct
- If using a junction box ensure you follow HAWK specification for extending cable
- '**Unit Specs & Checks**' has additional checks for causes of Error 01.

Error 02

Communication data corruption between Transmitter and Transducer.

- It can be a result of noise in data lines or one of data lines (white or blue) being open circuit.
- Make sure wiring is correct especially look to the screen (earth).
- Ensure you are using quality shielded instrument cable.
- '**Unit Specs & Checks**' has additional checks for causes of Error 02.

Error 03

- Specific comms mode is selected (eg Profibus, FF) but comms module is not connected or responding
- Check your unit part number to ensure it has correct comms
- If you do not have additional comms (part number option X) then select Modbus.

Error 04

Amplifier is programmed with incorrect software or has wrong hardware connected.

- Contact your local support.

Error Codes 08 - 11 & 13

Error 08

Transducer type mismatch.

Error 09

NV ram corrupted.

Error 10

NV write error

Error 11

Transducer no. 2 communication error (cannot talk to the sensor)

Error 13

Voltage error. Input voltage too low or voltage error.

Unit Specs & Checks

Sultan 234

Specified ranges (supply dependant): 90-260VAC, 12-30VDC, 30-48VDC). For suspected power issues ensure user supply is appropriate & consistent.

If using AC power you can check the power supply for faults by reading the DC +/- terminals with a multimeter set to DC. This terminal will produce 15-16VDC stable. If this value is lower or inconsistent you may a problem with the internal power supply.

Unit performance will be affected if the unit detects voltage below 9VDC. If 'V in chk' is on the unit will trigger its failsafe routine. If V in chk is off the unit will display V fail on the LCD.

Transducers

The Transducer power (red wire) should draw 8-10VDC. If this figure is too high or too low check Sultan power & supplied power as above.

Disconnect transducer from amplifier.

There should be no open circuits between wires. Resistances between transducer wires (approximate values):

Blue - White	32Kohms
Black - Blue	15.6Kohms
Black - Red	1-2Mohm (or OV / high resistance)
Black - White	15.6Kohms

If any are open circuit check wiring connections or there may be a problem with the transducer.

Transducer problems may exhibit via the amplifier protecting itself against high current draw - measure resistance across transducer: Red and DC:+ terminals on the amplifier while the transducer disconnected and then connected. If the resistance increases dramatically there is potentially a wiring or transducer problem.

Amplifier

Model

AWR234 Remote 3 / 4 Wire, 5 relays, Modbus

Housing

S Polycarbonate

Power Supply

B 12-30VDC
C 36-60VDC
U 12-30VDC and 90-260VAC

Additional Communications

S 5 relays with Modbus
X 4-20mA with Modbus
I 4-20mA with HART Isolated 4 wire
E Ethernet TCP/IP with 4-20mA & Enhanced Modbus
R Wi-Fi TCP/IP with 4-20mA & Enhanced Modbus|
P Profibus DP
A Profibus PA
F Foundation Fieldbus
B Bluetooth with 4-20mA
D Devicenet
C PoE (Modbus & Power over Ethernet) (AWR234 only, Power Supply 'B' only)

Accessory

X Not Required

Approval Standard

X Not Required
A22 ATEX Grp II Cat 3 GD T85°C IP67 Tamb -40°C to 70°C
GP (Power Supply option 'B' only) CSA Equip Class 2; Pollution deg 2; Tamb -20°C to 75°C (Ordinary Locations)

Additional Software

X Not Required

AWR234	S	U	X	X	X		X

Remote Sonar Transducer

AWRTS Sultan Sonar Transducer

Transducer

002 151kHz (Bed Level applications)
003 300kHz (Bed level / dense floating layers approx 2-5% solids)
004 450kHz (Lighter floating layers approx 0.5-2% solids)
005 700kHz (Lighter floating layers <0.5% solids)

Facing & Housing material

S4 Full fiberglass version (max 50°C / 122°F)
SH Full fiberglass version (max 50°C / 122°F)

Approval Standard

X Not Required
RN CSA Class I; Div 1/2; Group D; Zone 0; AEx/Ex ia IIA; T4
GP CSA Equip Class 2; Pollution deg 2; Tamb -20°C to 75°C (Ordinary Locations)
i0 IECEx Zone 0 (Ex ia IIA T4 IP68 Tamb -20°C to 70°C)
A0 ATEX Grp II Cat 1 GD EEx ia IIA T4 IP68 (Tamb -20°C to 65°C)
A1 ATEX Grp II Cat 2 GD EEx m II IP68 T5 (Tamb -20°C to 65°C)
T6 (Tamb -20°C to 50°C)
i1 IECEx Zone 1 (Ex mb II IP68 T5(Tamb -20°C to 65°C) T6(Tamb -20°C to 50°C))

Connection

C IP68 Sealed cable
6 6m cable
15 15m cable
30 30m cable
30 50m cable

AWRTS	004	S4	X	C	6

Scum Cleaner

IMPACT-PLATE: Single direction auto scum cleaner (requires contact with surface sweeper)

IMPACT-PLATE-2: Dual direction auto scum cleaner (requires contact with surface sweeper)

Accessories

HAWKLink Data Modem

HLR Remote stand alone HAWKLink system

Power Supply

B 12-30VDC

U 12-30VDC and 90-260VAC

Network Type

G3 4G Autoband

Sim Card

S3 Australian Sim Card expires after 3 months

S12 Australian Sim Card expires after 12 months

X Not Required

HLR	**U**	**G3**	**S3**

HAWKLink USB PC connector for GosHawkII

HAWKLink-USB

Stainless Steel Sunhood

SUNHOOD

Extra Cable (Belden 3084A)

CA-TXCC-R-C15 15m cable

CA-TXCC-R-C30 30m cable

CA-TXCC-R-C50 50m cable

CA-TXCC-R-C100 100m cable

Sonar Frequency Selection

- 151kHz (Bed Level applications)
- 300kHz (Bed level / dense floating layers approx 2-5% solids)
- 450kHz (Lighter floating layers approx 0.5-2% solids)
- 700kHz (Lighter floating layers <0.5% solids)

Operating Voltage

- 12 - 30Vdc (residual ripple no greater than 100mV)
- 90 - 265Vac 50 / 60Hz
- 36 - 60Vdc

Power Consumption

- <3W @ 24Vdc
- <10VA @ 240Vac
- <4W @ 48Vdc

Analogue Output

- 4 – 20mA (750ohm@ 24Vdc User Voltage supply) or Internal driven 250ohm.

Communications

- GosHawk, Modbus, HART, Profibus DP, DeviceNet, Foundation Fieldbus, Profibus PA.

Relay Output

- 5 x Form 'C' (SPDT) contacts, rated 0.5A at 240Vac non-inductive
- All relays have independently adjustable dead bands

Maximum Range

- 15m (50ft)

Blanking Distance

- 350mm

Resolution

- 1mm

Accuracy

- +/- 0.25%

Operating Temperature

- Remote Electronics -40°C (-40°F) to 80°C (176°F)
- Sonar Transducer: -40°C to 50°C

Transducer Material

- Polypropylene Housing, Fiberglass Face

Impact Plate Material

- 316L Stainless Steel.

Transducer / Transmitter Separation

- >500m

Note: Must be BELDEN 3084A.

Display

- 2 line x 12 digit alphanumeric LCD.

Memory

- Non-Volatile (No backup battery required)
- >10 years data retention.

Enclosure Sealing

- Remote Electronics IP65 (Nema 4x)
- Remote Transducer IP68.

Cable Entries

- Remote: 3 x 20mm, 1 x 16mm knock outs.

Cable (Sonar Transducer)

- 4 conductor shielded twisted pair instrument cable
- Conductor size dependent on cable length
- BELDEN 3084A, DEKORON or equivalent
- Max: BELDEN 3084A = 500m (1640 ft)
- Max: DEKORON IED183AA002 = 35 0m (980 ft).

Typical Weight

- Remote Electronics 1kg
- Remote Transducer 1kg
- Impact Plate 5kg.

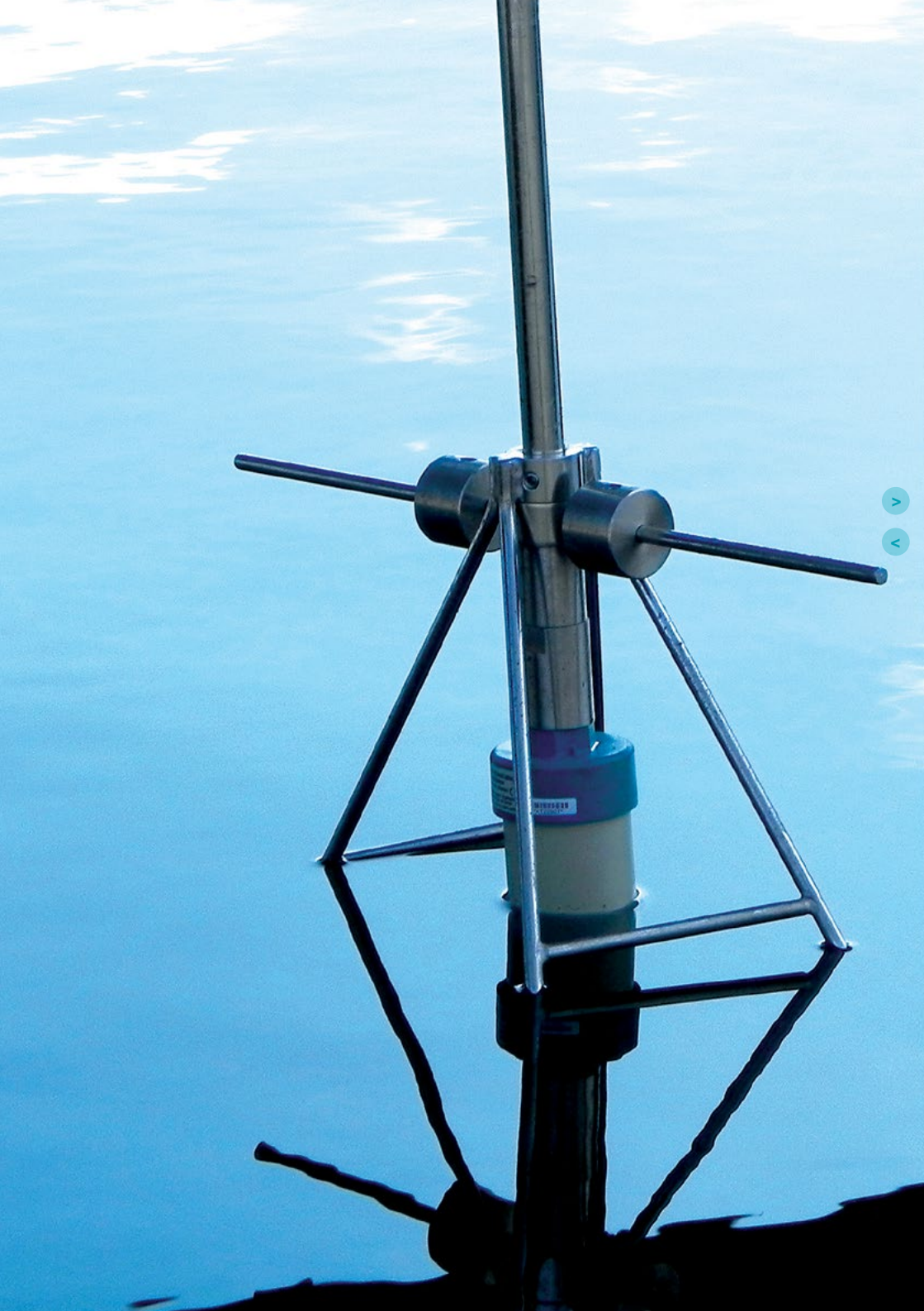





HAWK, Since 1988

Hawk Measurement Systems Pty Ltd (HAWK) was established in 1988. It's founding members saw the universal requirement of various industries requiring improved process control and efficiency in their operations.

We Can Help

HAWK understands the difficulties customers face when seeking accurate level measurement. Every application is different, involving a multitude of environmental factors. This is where HAWK excels. Our aim is to ensure that customers not only feel comfortable with our technology, but that we also to ensure a consistent and reliable solution is in place for the long term. We believe that a combination of application and product expertise, as well as forward thinking and proactive support policies are the foundation of successful customer-supplier relationships.

Progressive Technical Support

HAWK believes that the future of the Level Measurement Industry revolves around the quality of pre and post sales - support. Our aim is for all sales & support staff to be product experts, and more importantly application experts making our customers applications as efficient and consistent as possible.

Remote Innovation

HAWK understands the need for immediate technical assistance.

The HAWKLink 3G communication device allows any computer with internet access and our free GosHawk diagnostic & calibration software; to dial in, calibrate, test, and check the performance of HAWK products. This innovative system allows our Global Support Team to assist with commissioning and after sales service of HAWK equipment worldwide. Measurement problems are addressed as they happen; not days or weeks later.

Knowledge Sharing

HAWK believes that knowledge sharing is key to creating long term relationships. Empowering our customers and our worldwide distribution network, whilst being available at all times to lend a helping hand, is the perfect recipe for long term solutions and relationships. HAWK openly extends an invitation to share our 25 years of level measurement experience, and ensure that your day to day processes are efficient, understood, and always working.

All company or product names are registered trademarks or trademarks of their respective owners.

Hawk Measurement Systems
(Head Office)
15 - 17 Maurice Court
Nunawading VIC 3131, AUSTRALIA

Phone: +61 3 9873 4750
Fax: +61 3 9873 4538
info@hawk.com.au

Hawk Measurement
5010 Gateway Drive, Medina,
OH 44256, USA

Phone: +1 888 HAWKLEVEL (1-888-429-5538)
Phone: +1 978 304 3000 / +1 877 356 5463
Fax: +1 978 304 1462 / +1 330 331 7172
info@hawkmeasurement.com

For more information and global representatives: **www.hawkmeasurement.com**

DOC-SSS-MAN v1.45 0921