A Higher Level of Performance

User Manual

ORCA

Sonar System

Sludge and Settling Level Interface Monitoring



For more information, please visit >

www.hawkmeasurement.com

Contents

Contents

Overview 4
Principle of Operation 4
Function 4
Benefits 4
Features 4

System Components 5
Auto Scum Cleaner 5
OSIR Amplifier 5

Dimensions 6
OSIR Remote Amplifier 6
OSIRMELx* - Mounting Pole 6
OSIRSCE - Impact Plate 6
OSIRSCE - Impact Plate 7
OSIRT / AWRTSH Transducer 7
OSIRSCA Actuator 7
OSIRSCD Floating Sonar 7
Mounting Bracket 8
Jet Spray Cleaner Kit 9

Assembly 10
Mounting Bracket / Pole Assembly 10
Mounting Bracket / Pole Assembly 11

Dimensions & Mounting Connection 12
Impact Plate Mounting Connection 12

Mounting & Hardware Assembly 13
Impact Plate Assembly 13

Installation Guide 14
Installation Guide 14
Round Tanks – Centre Feedwell 14
Rectangular Tanks – End Feed 14
Ball Float 14
Impact Plates 14

Wiring 15
Wiring - Remote Transmitter 15
Wiring Extension 15

Actuator Cable Specification 16
Actuator Cable Specification 16

Profibus PA - Foundation Fieldbus (PA/FF) 17
Profibus PA - Foundation Fieldbus (PA/FF) 17

DeviceNet 18
DeviceNet 18

Profibus DP 19
Profibus DP 19

Setup Procedure 20
Powering The Unit 20
Quickset 21
Typical High & Low Level 21
App Type 22
Interface Table 22
Bed Depth 22
App Type2 23
Interface Table 23
Clarity 23
Output Adjustment 24

Contents

Comms Type 25
Comms Type (Menu) 25
Modbus 25
HART 25

Cleaning Menu 26
Cleaning 26
Actuator 26

Setup Procedure 27
Advanced 27
Gain4 default settings 27
Gain-Over-Distance bias 27

Relay Actions 28
Relay Actions 28

Operating Diagnostics 29
Operating State 29

Application Calibration 30
How To Set Up The Unit - Bed Level + Hindered / Settling Layer Measurement 30
How To Set Up The Unit - Bed Level + Clarity 31
How To Set Up The Unit - Hindered Layer + Clarity 32

Troubleshooting 33
Unit Is Measuring Incorrect Bed or Space 33
PLC Indication Does Not Match Measurement 33
Some Menu Options Are Missing 33
Error Codes 34
Unit Specs & Health Checks 35
ORCA Electric Actuator Troubleshooting 36

Part Numbering 37
Remote Electronics 37
Remote Electronics 37
Remote Sonar Transducer 38
Remote Sonar Transducer With IECEx / ATEX Approval 38
Remote Sonar Transducer With CSA Approval 39
Automatic Scum Cleaner 39
Mounting Extension Pipe 40

Specifications 41

Warranty and Liability 42

Principle of Operation

The ORCA Sonar Series transducer emits a high powered low frequency sonar pulse, which is reflected from the interface density selected. The reflected signal is processed using specially developed software algorithms that eliminate unwanted densities and stratified layers, allowing measurement of Bed or RAS levels. It can be calibrated to measure lighter densities such as the hindered / free settling layer & floc or one of the outputs could be used for a “Clarity” output, similar to a basic turbidity transmitter measuring solids in suspension. The unit can include two outputs to measure two different interfaces simultaneously.

Function

The ORCA Series Sonar, sludge blanket and interface controller, consists of a microprocessor based transmitter, with easy menu driven programming via keypad, PC or 3G modem. The ORCA controller works together with appropriate sonar transducer and transducer cleaning mechanism.

Benefits

- Improved efficiency and control of the thickener process
- Fully automated plant systems with reliable interface level monitoring
- Advanced warning of process upset or hydraulic in-balance
- Reduced maintenance with automatic cleaning mechanism warranty (no blades to replace)
- Reduced site operational costs significantly with improved process & extraction control
- Improved health and safety on site (no manual dips required).

Features

- Dual independent analogue outputs to track two different interfaces, or clarity simultaneously, with the one sonar sensor
- Easy to use pre-set calibrations to track specific density interfaces, eg: floc / fluff layer, Bed
- Industrial scum cleaning mechanisms that do not require maintenance
- Control room graphics of tanks and interfaces via GosHawkII
- Wide range of communications: Modbus, HART, Foundation Fieldbus, DeviceNet, Profibus DP and Profibus PA
- 3G remote support capability for calibration, commissioning or technical back-up
- 3 programmable relays.

Auto Scum Cleaner

OSIRSCA Pictured with Mounting Pole



Sonar Transducer

OSIR Amplifier



OSIR Remote Amplifier

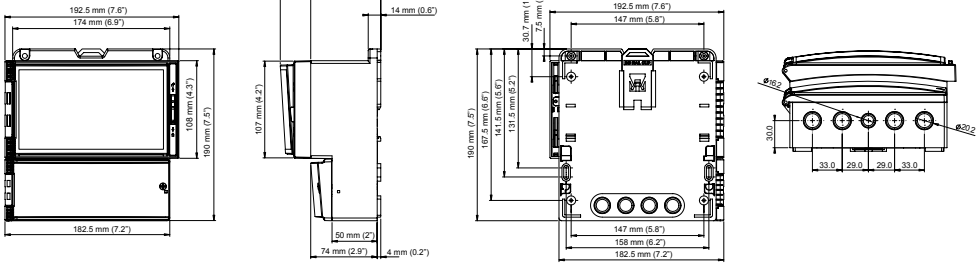

OSIRMELx* - Mounting Pole

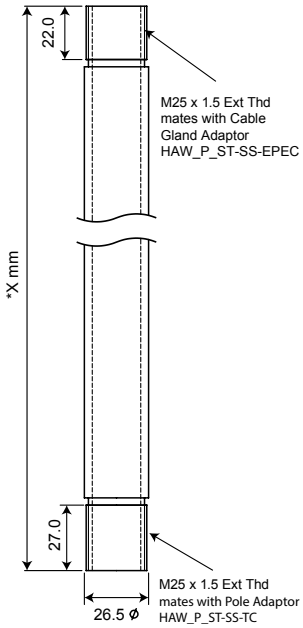

OSIRSCE - Impact Plate

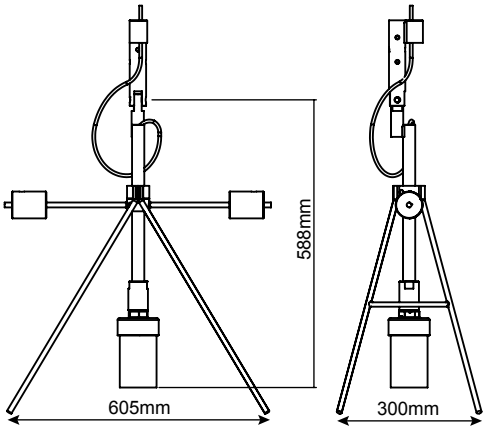

OSIRSCE - Impact Plate

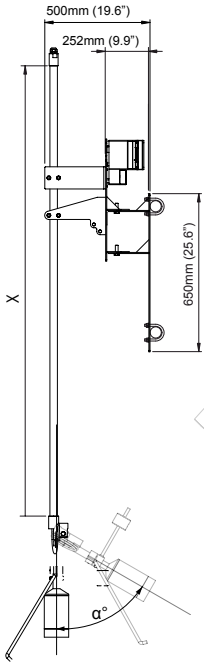

OSIRSCA Actuator

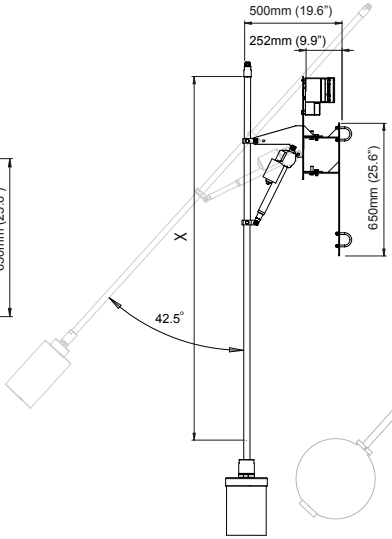

OSIRSCD Floating Sonar

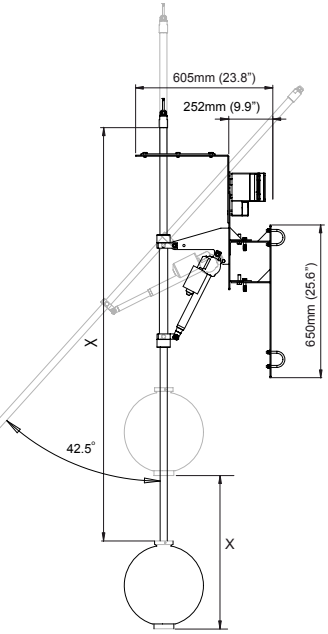

X = Decent Range
Distance from safety
rail or Bridge may vary

OSIRT / AWRTSH Transducer

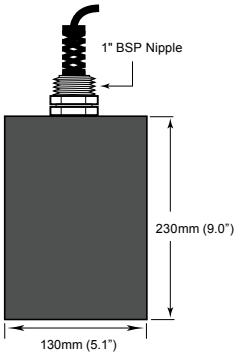

Mounting Bracket

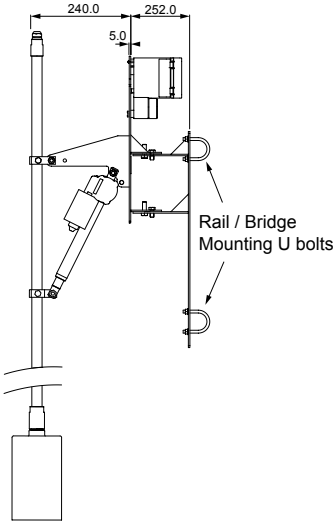

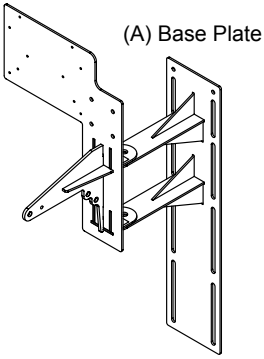

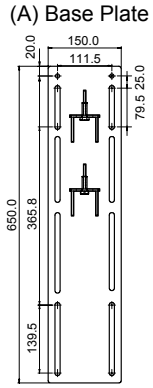

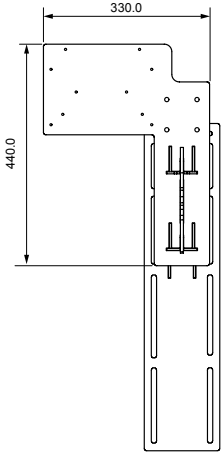

Jet Spray Cleaner Kit

Side

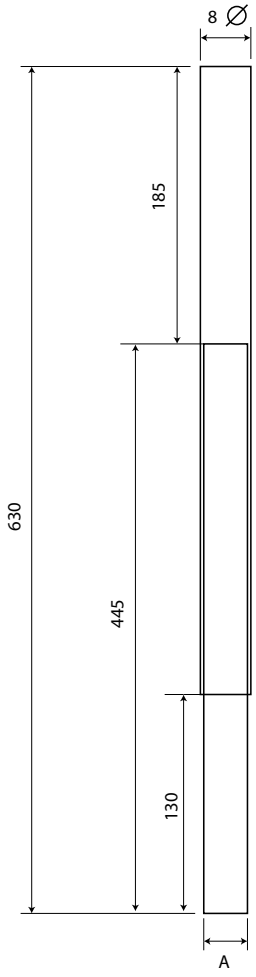

Front

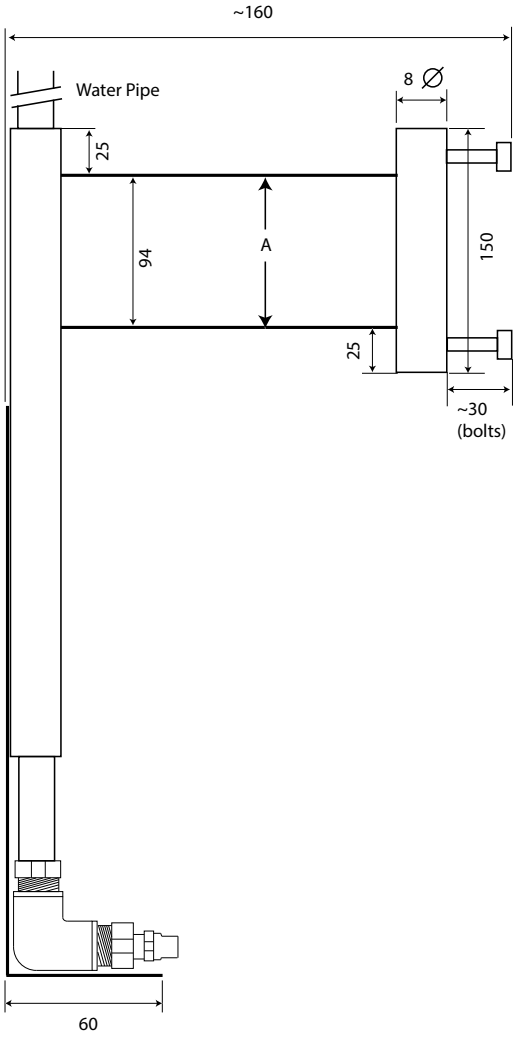

Mounting Bracket / Pole Assembly

OSIRSCA pictured

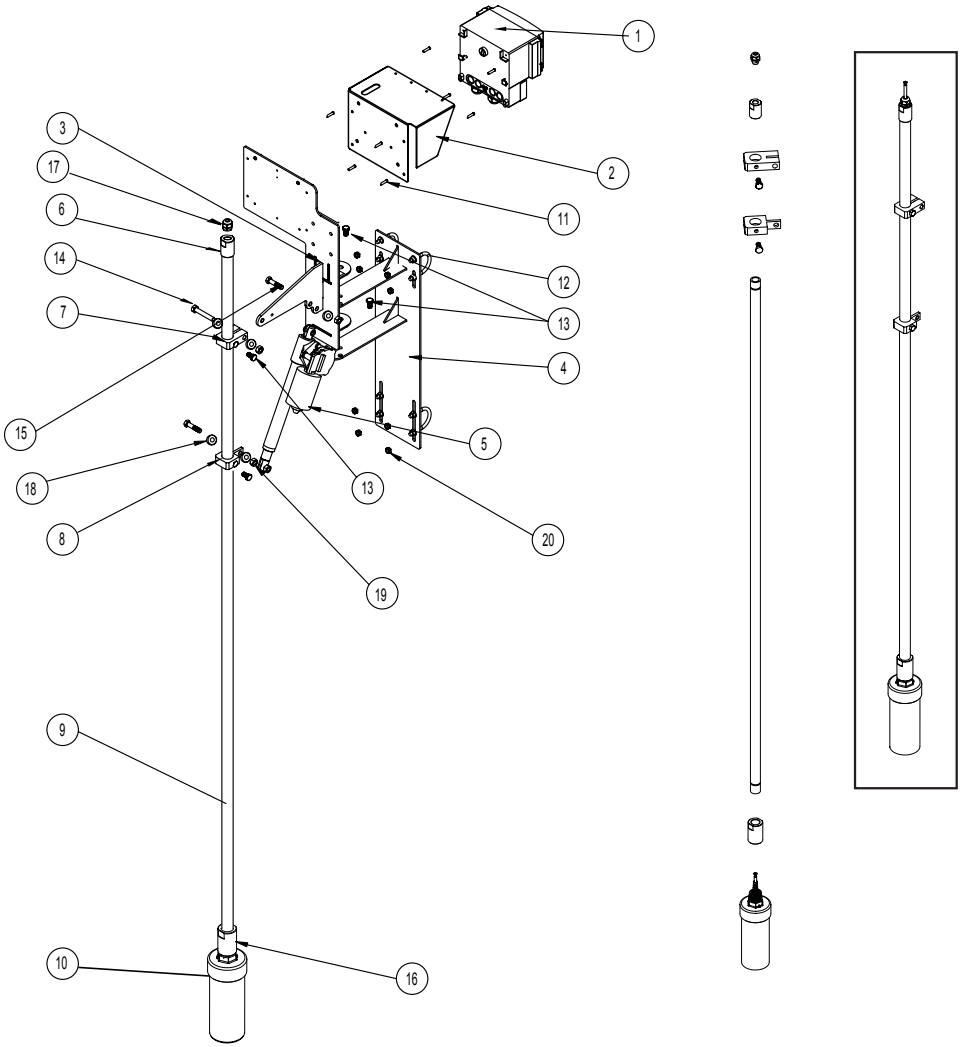

Mounting Bracket / Pole Assembly

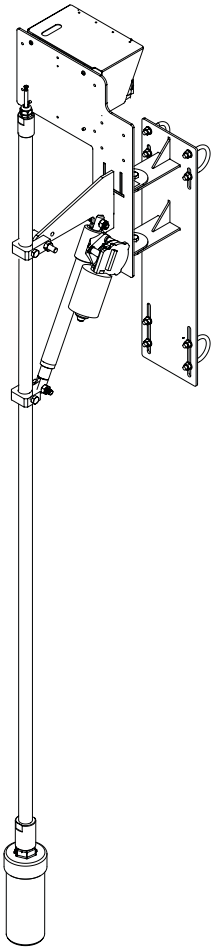

Item No.	Part Number	Description	Qty
1	OSIRxxx	ORCA Transmitter	1
2	SUNHOOD	Stainless Steel Sunhood	1
3	SA-SS-AAFB	Stainless Steel Front Bracket	1
4	SA-SS-AARB	Stainless Steel Rear Bracket	1
5	LAUS061196E Actuator	Actuator (only with OSIRSCA/OSIRSCD)	1
6	ST-SS-EPEC	Pole to Cable Gland Adaptor with M16 cable gland	1
7	ST-APC-26.8-INT	SS Internal Pipe Clamp	1
8	ST-APC-26.8-EXT	SS External Pipe Clamp	1
9	ST-SS-EP	Mounting Pole	1
10	OSIRTxxxxxxxx	Sonar Transducer	1
11	ZPP-M5X20MM	M5x20 Phillips Pan Head	8
12	U-BOLT 50mm x 8DIA	U-Bolt with nuts and washers	4
13	BOL-M10x15SS	M10 x 15mm SS Bolt	4
14	BOL-M10x50SS	M10 x 50mm SS Bolt with washer & nyloc nut	1
15	BOL-M10x40SS	M10 x 40mm SS Bolt with washer & nyloc nut	2
16	ST-SS-TC	Sonar Pole Adaptor	1
17	GLA-M16	M16 Cable gland IP68 with washer	1
18	Washer-M10	M10 washer for M10x40mm & M10x50mm SS Bolt	6
19	Nut-M10	M10 nut for M10x40mm & M10x50mm SS Bolt	5
20	Nut-M8	M8 nyloc nut for 50mm U-bolt	8

Impact Plate Mounting Connection

The top of the Impact Plate has 3 x 7mm bolt holes which can be secured to an angle iron or equivalent bracket. There is also a M25 (1.5") threaded connection for a mounting pole connection. The Impact Plate is designed to swing parallel with the counter weights. The surface sweeper must come in contact with the legs of the Impact Plate which swings the bracket lifting the transducer out of the liquid. When the sweeper has cleared, it will drop back in and use the counter weights to re-center. The force of the movement will clear the sensor face of any build up

Impact Plate Connection Point

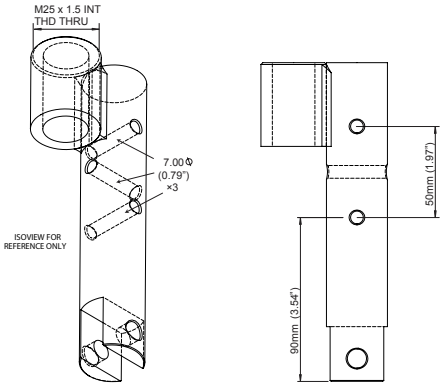

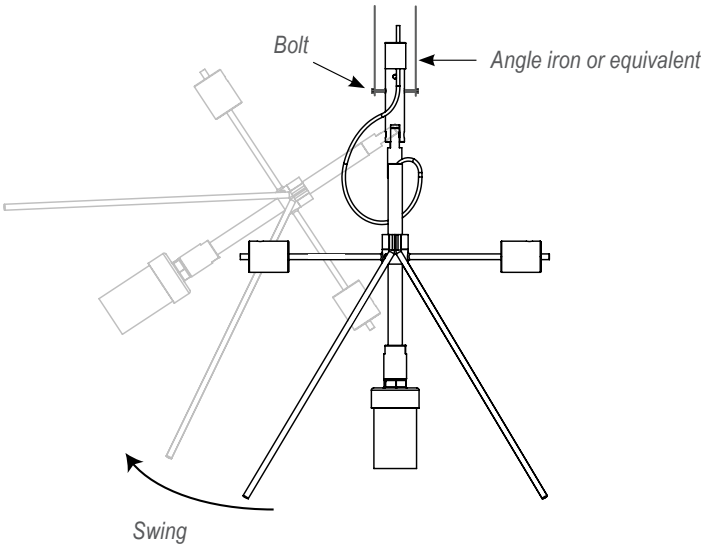

Impact Plate Assembly

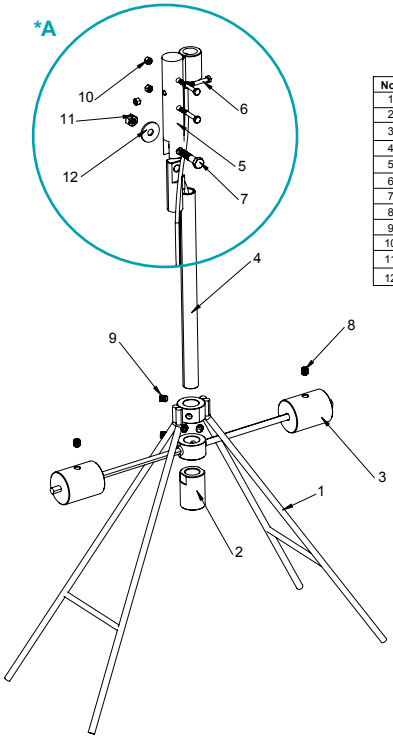

No.	Description	QTY.
1	Impact Plate Dual Direction	1
2	Sonar Pole Adaptor	1
3	Impact Plate Counter Balance	1
4	Sonar Male Clevis Assembly	1
5	Sonar Female Clevis Assembly	1
6	M6×45 Stainless Steel Bolt	3
7	M10×40 Stainless Steel Bolt	1
8	M10×12 Stainless Steel Set Screw	4
9	M10×20 Stainless Steel Set Screw	2
10	M6 Stainless Steel Nut	3
11	M10 Stainless Steel Nyloc Nut	1
12	M10 Stainless Steel Washer	1

*A: Important Cabling Steps to Follow

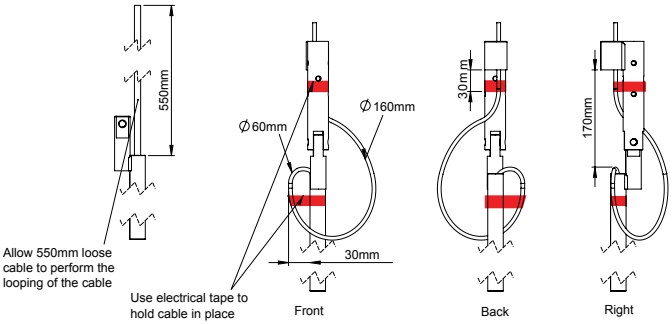

Installation Guide

ORCA Transmitter – Mounting Requirements

Select a suitable mounting position, preferably not in direct sunlight. If necessary utilize a sunshade.

Observe the maximum and minimum temperature specification.

Do not mount the sonar transmitter near high sources of EMF, such as motor starters, variable speed drives or 3 phase cables. Avoid mounting in high vibration areas, or use rubber absorption mounts.

Be careful when removing the cable and compression glands.

Sonar Transducer – Mounting Requirements

The transducer should be half submerged in the liquid and the transducer face must always be submerged.

Wrap cable entry and lower connection cable with Teflon tape

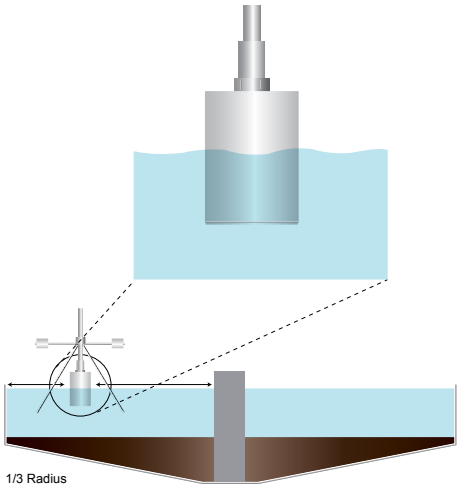

Round Tanks – Centre Feedwell

Mount the sonar transducer and cleaning mechanism, approximately one third radius between the outside tank wall and the feedwell. This is the same whether it is a moving or fixed bridge installation.

Do not mount near high infeed turbulence.

Choose a site installation where the infeed is least disturbed.

Rectangular Tanks – End Feed

Mount the sonar transducer and cleaning mechanism away from high infeed turbulence. A clearance of 700mm from the side wall.

Do not mount directly over scraper, chain mechanisms. Choose a site installation where the infeed is least disturbed.

Ball Float

Mount the floating sonar transducer and cleaning mechanism as close as practicable to the launders.

Mount at least 1.00 metres from side walls. Ensure alignment guides are installed on the mounting bracket for decanter ranges above 500mm.

Impact Plates

Leave an extra 2 turns of cable where the transducer connects to the actuator to minimise stress and wear on the cable (see Impact Plate Assembly).

Wiring - Remote Transmitter

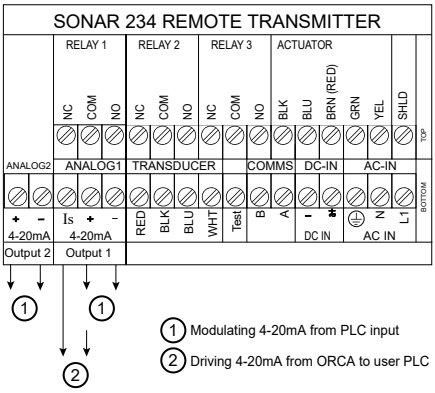

Wiring Extension

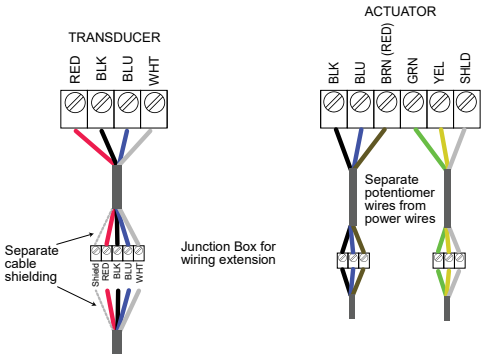

Foundation Fieldbus

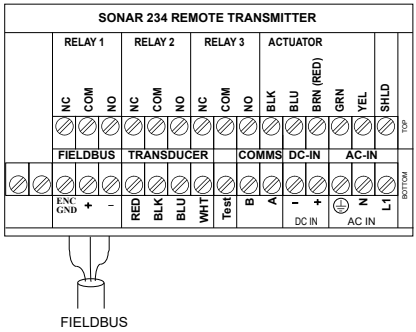

Profibus PA

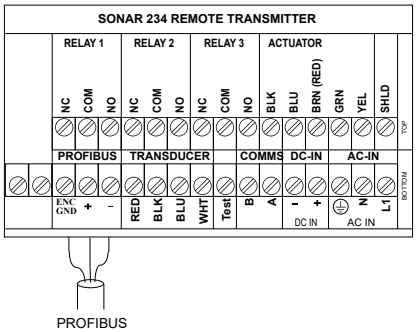

DeviceNet / Profibus DP

Terminal plug located right hand side of main terminal board.



DeviceNet **Profibus DP**

Jet Spray Solenoid Wiring

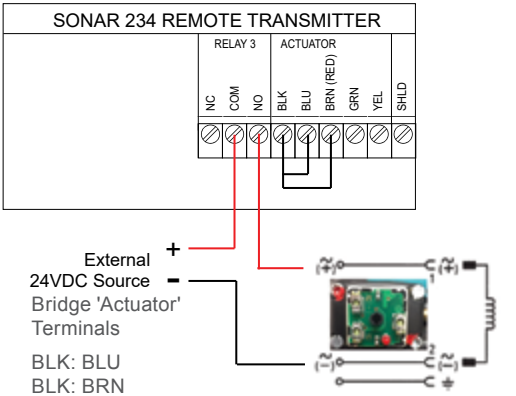

Actuator Cable Specification

Note 1: Calculations based on:

4.0 Amps max actuator current and;

4.0 Volts drop across max cable length (2 wires)

Note 1: Note 2: Maximum terminal capacity is 1.5mm, which limits 16AWG cable to35m.

Note 3: For long cable runs, use 16 AWG to local junction box, then extend using 10-14 AWG.

Note 4: Also required: 3-wire cable for feedback potentiometer, 0.5mm - 1.0mm.

Gauge AWG	Nom OD mm	Resist Ohm/1000ft	Resist Ohm/m	Loss V/m	Max Res Ohm	Max Dist m
10	2.9201	0.80	0.0035	0.028	1.00	141.1
12	2.4401	0.71	0.0056	0.045	1.00	89.1
14	1.9302	0.73	0.0090	0.072	1.00	55.8
16	1.5204	0.35	0.0143	0.114	1.00	35.0
18	1.2206	0.92	0.0227	0.182	1.00	22.0
20	0.965	0.90	0.0358	0.286	1.00	14.0

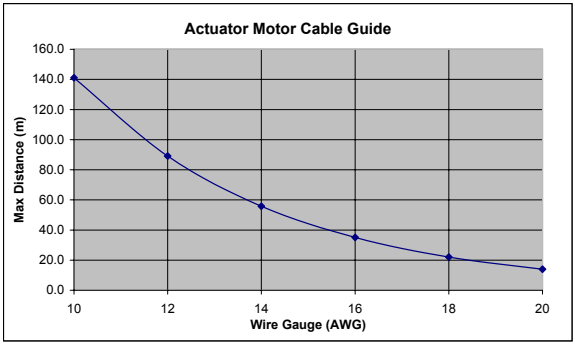

Profibus PA - Foundation Fieldbus (PA/FF)

See dedicated manual for Profibus PA and FF available from http://www.hawkmeausurement.com

DeviceNet

Set the BaudRate and the DeviceNet Address in Sultan

Factory defaults of baudrate and FBusAdds are 125kbps and 63 in a Sultan unit with DeviceNet CommType. To modify these values follow the instructions below.

1. Go to the Output Adjustment menu
2. Use the Up and Down push buttons to reach the CommType parameter
3. Make sure that the CommType is set to DeviceNet
4. Press the CAL button twice. If you see DeviceID do not modify this parameter.
5. Use the Down push button to reach the BaudRate parameter
6. The default value for the BaudRate is 125kpbs. Press CAL button and use the Up and Down push buttons to modify this value
7. Press CAL button when finished
8. Use the Down push button to reach the FBusAdds. The default value of the Fieldbus Address is 63. Press CAL button and use the Up and Down push buttons to modify this value
9. Press CAL button again when finished

Output Data

Profibus DP and DeviceNet now transmit 18 bytes/9 words, description of the words is as follows (For firmware version 5.54 and above)

1. Displayed Distance
   (Space Distance is the Primary Variable)
2. Percentage (Percent of Range)
3. Hi Level (Upper Range)
4. Low Level (Lower Range)
5. Status Flags
6. Displayed Distance2 (Second Variable)
7. Percentage2 (Second Percent of Range)
8. Displayed Distance3 (Third Variable)+
9. Percentage3 (Third Percent of Range)+

Failed	~~~~~~	**Search**	0	**Echo Cfm : 1 = True, 0 = False**	**Echo R : 1 = True, 0 = False**
Bit F	Bit E	Bit 3		Bit 1	Bit 0

Bit0 = Echo was received inside the span.

Bit1 = Echo is Confirmed.

Bit3 = Searching is searching for an Echo.

BitF = Unit has Failed to detect an Echo.

+Only used for ORCA Sonar Clarity output.

Profibus DP

Set the Profibus Address in Sultan

Factory defaults of FBusAdds is 126 in a Sultan unit with Profibus CommType. To modify this value follow the instruction below:

1. Go to the Output Adj menu
2. Use the Up and Down push buttons to reach the CommType parameter
3. Make sure that the CommType is set to Profibus DP
4. Press the CAL button twice - If you see DeviceID do not modify this parameter
6. Use the Down push button to reach the BaudRate parameter. Note this cannot be modified
8. Use the Down push button to reach the FBusAdds. The default value of the Fieldbus Address is 126. Press CAL button and use the Up and Down push buttons to modify this value
9. Press CAL button again when finish.

Output Data

Profibus/DeviceNet now transmit 18 bytes/9 words, description of the words is as follows (For firmware version 5.54 and above).

1. Displayed Distance (Space Distance is the Primary Variable)
2. Percentage (Percent of Range)
3. Hi Level (Upper Range)
4. Low Level (Lower Range)
5. Status Flags
6. Displayed Distance2 (Second Variable)
7. Percentage2 (Second Percent of Range)
8. Displayed Distance3 (Third Variable)+
9. Percentage3 (Third Percent of Range)+

Failed	~~~~~~	Search	0	Echo Cfm : 1 = True, 0 = False	Echo R : 1 = True, 0 = False

Bit F Bit E Bit 3 Bit 1 Bit 0

Bit0 = Echo was received inside the span.

Bit1 = Echo is Confirmed.

Bit3 = Searching is searching for an Echo.

BitF = Unit has Failed to detect an Echo.

+Only used for ORCA Sonar Clarity output.

Powering The Unit

When power is applied the unit will start up automatically. It will scroll through its boot diagnostics and display the serial numbers, software version and model types for the amplifier and transducer

The unit will display its default operating screen depending on the App Type selected (default: Bed) on the top line and a distance or % on the bottom line. The distance will be the programmed display mode (Default: Level).

The unit will re-scan for the measurement whenever it is powered up.

The sensor face must be submerged in liquid in order to operate correctly.

CAL	CAL for select / proceed / edit
▲ ▼	Arrows to scroll / adjust
RUN	RUN to re-active unit

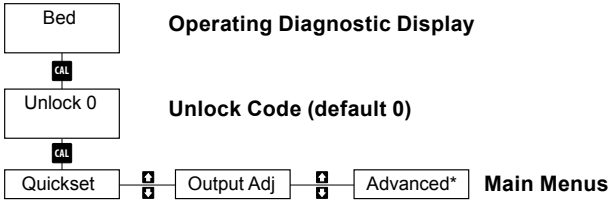

Operating Diagnostic Display

Unlock Code (default 0)

Main Menus

Amplifier / Application settings	Comms / Output Settings	Transducer settings.

**Do not adjust Advanced settings without expert knowledge*

Quickset

The **Quickset** menu contains the basic parameters required to get the unit up and running.
It is one of the three main menu options in the internal software.

Parameter	Description	Options			
Unit	Adjust displayed measurement unit	Inches	Feet	Meters	Centimeters
App Type	Select Application Parameters for Output 1	See Unit Setup: 'App Type'			
App Type2	Select Application Parameters for Output 2	See Unit Setup: 'App Type2'			
Failsafe	Set failsafe output & timer	20mA 4mA LastKnown 3.80mA 3.50mA 20.20mA			
DispMode	Set LCD measurement display mode	Level	Level%	Space	
Offset	Add offset distance to output	Adjustable			
Amp Reset	Restore Amplifier settings to factory default	Yes / No			

Typical High & Low Level

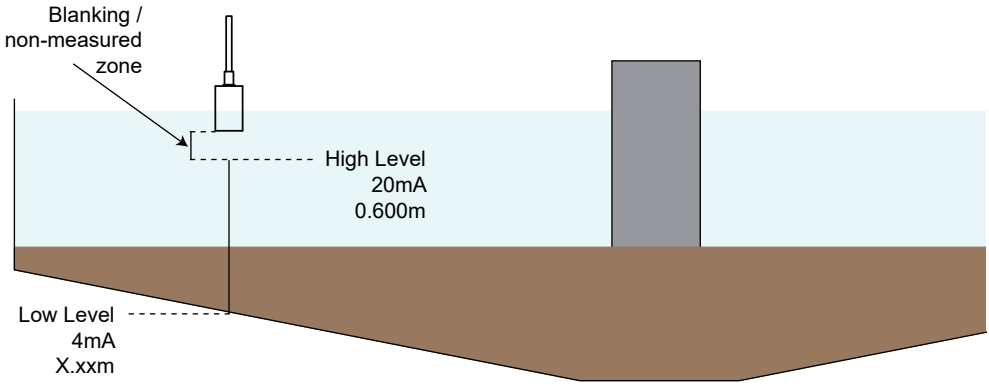

Typical installation - Set 'Low Level' (4mA) to be the distance from the transducer face to the bottom of the tank. High Level should be 0.600m for most accurate and reliable measurement.

App Type

App Type is the first output and should be considered the primary measurement. If monitoring Bed level this should be selected here. App Type has three pre-set application types.

- Bed (dense/heavy blanket layer)
- RAS (return activated sludge)
- Floc (flocculent/hindered settling layer).

Parameter	Description	Options
App Type	Set display readout	Bed / RAS / Floc
Density	Select interface to be measured	See **Interface Table** below
Calibrat	• Manually fine tune sensor sensitivity • Press CAL to fire a test pulse which will return the depth measurement.	Higher value for lighter densities, lower value for heavier densities.
Lo Level	Set Lo Level measurement point (4mA)	Adjustable
Hi Level	Set Lo Level measurement point (20mA)	Adjustable
Bed Depth[(1)]	Bed Depth instructs the unit to ingnore any Echoes within the programmed distance - see Bed Depth[(1)]	Adjustable in depth (measured from Sensor face down)
Fill Rate*	Set potential filling rate for primary measurement	Adjustable (units per hour)
Empty Rate*	Set potential emptying rate for primary measurement	Adjustable (units per hour)

**For most applications the unit is pre-calibrated with appropriate tracking speeds. You will not need to adjust these settings.*

Interface Table

Density Selected (g/l)	Typical Applications	
0.1 - 0.6	Lighter layers	
0.6 - 1.2	Hindered Layer	Settling Layer
1.2 - 3.0	RAS	
3.0 - 6.0	RAS	Bed
6.0 -1 0.0	Bed	
10+	Bed / Heavy Sludge	

(1) Bed Depth

Bed Depth must be closer than the maximum expected Bed layer distance for the application. It is used to instruct the unit to ignore closer echoes that are not the Bed level.

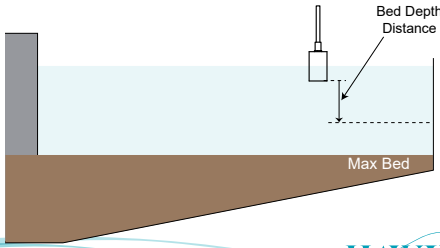

App Type2

App Type is the second output and should be considered the secondary measurement. This output is sampled and updated at programmed intervals

- Bed (dense/heavy blanket layer)
- RAS (return activated sludge)
- Floc (flocculent/hindered settling layer)
- Clarity (indication of signal lost due to liquid conditions, 0% poor conditions, 100% clean conditions).

Parameter	Description	Options				
App Type2	Set display readout for secondary measurement	Off	Bed	Ras	Floc	Clarity**
Density	Select interface to be measured	See **Interface Table** below				
Calibrat	• Manually fine tune sensor sensitivity • Press CAL to fire a test pulse which will return the depth measurement.	Higher value for lighter densities, lower value for heavier densities.				
Lo Level2	Set Lo Level measurement point (4mA)	Adjustable				
Hi Level2	Set Lo Level measurement point (20mA)	Adjustable				
SmplRate	Set the time between measurement samples taken for the App Type2	Adjustable (minutes)				
Damping2	Adjust 2nd output response time / smoothness	Value in pulses, approximately 2 pulse per second				

*** See 'Clarity' for important information*

Interface Table

Density Selected (g/l)	Typical Applications	
0.1 - 0.6	Lighter layers	
0.6 - 1.2	Hindered Layer	Settling Layer
1.2 - 3.0	RAS	
3.0 - 6.0	RAS	Bed
6.0 - 10.0	Bed	
10+	Bed / Heavy Sludge	

Clarity

Clarity is a representation of how clear the liquid is between the interface measured by App Type (output 1) and the transducer face.

The unit monitors the number and quality of return echoes and uses an algorithm to convert this to a percentage. The percentage is a rolling average of approximately 5 minutes of measurement.

Output Adjustment

The Output Adj menu contains parameters related to adjusting analogue, switch & communication protocol relayed settings.

Parameter	Description	Options	
FillDamp EmtyDamp	Adjust first output response time / smoothness	Value in pulses, approximately 2 pulse per second	
4mA Adj	Fine tune the 4mA output current	Adjustable	
20mA Adj	Fine tune the 20mA output current	Adjustable	
Analog	Invert analogue from 4-20mA to 20-4mA	4-20mA	20-4mA
Simulate	A simulated distance reading is transmitted as analogue (distance measured from sensor face)	Adjustable	
4mA Adj2	Fine tune the 4mA output2 current	Adjustable	
20mA Adj2	Fine tune the 20mA output2 current	Adjustable	
Comm Type	• Adjust communication protocol settings • Analogue and Switch models include Modbus as standard	See 'Comms Type' section	
RlyMod 1-3	Configure Relay actions	See 'Relay Actions' section	
Cleaning	Set auto cleaner parameters	See 'Cleaning' section	
Bk Light	Turn on/off LCD backlight	On/Off	
DispChar	Switch display from 12 character to 8 character (older units)	12 digit / 8 digit	
V In Chk	When active the unit will switch to failsafe mode if input voltage drops below required power. When not active unit will display 'Input Voltage too low' on the display.	On / Off	

Comms Type (Menu)

Sub-Menu	Description	Options
DeviceID	Adjust unit device ID for Modbus, HART	1-255
FBusAdd	Adjust unit Device ID for FF/PA, DeviceNet, Profibus DP	1-255
BaudRate	Adjust comms network speed	Comms dependent

HART

Command Number 3. Current and dynamic variables

Description	Byte No.
Current (mA)	0-3
PV1 Unit (App Type1)	4
PV1 Measurement (App Type 1)	5-8
SV unit (App Type 2)	9
SV measurement (App Type 2)	10-13
TV unit (%)	14
TV (Clarity % reading)	15-18
QV unit (kelvin)	19
QV (Temperature)	20-23

Modbus

Protocol: Modbus RTU (2 wire)
Speed: 19200 Baud
Data bits: 8
Parity: None
Stop Bits: 1

HAWK Sultan series units act as ‘slave’ devices on a Modbus network. Units are shipped from the factory with a default Modbus address of 1. The Modbus address of any unit can be changed individually if units are to be connected in a multi-drop network. Each address number must only be used once on any network (possible addresses are 1-255).

Primary Measurement Modbus Registers

Description	Address
App Type (Output 1) measured distance (from sensor face to measured level), mm	40125
App Type2 (Output 2) measured distance (from sensor face to measured level), mm	40118
Clarity (%)	40117
Meausred Gain: Data range 0-720. Divide by 7.5 to convert to %	40170

Note: Comms option 'X' and 'Y' includes Modbus as standard.

Cleaning

Sub-Menu	Description	Options
Spry	Uses Relay 3 to activate an external system (such as a spray cleaner) for the selected time. The actuator swing will be at full extension for this selected time. Typical setup for the Jet Spray Cleaner is to set 'Actuator' Cycle to 15 minutes, and then spet Spry timer to Spry 30 seconds.	60 mins 30 mins 10 mins 90 sec 60 sec 30 sec
Solenoid	Uses Relay 3 to drive an external solenoid (used for pneumatic actuator control)	Selectable
Brush	Uses Relay 3 to drive an external solenoid (used for wiper brush control)	Selectable
Actuator	Selects Actuator auto cleaning function (default cleaning option). Actuator will extend and retract based on programmed timer.	See 'Actuator'
Off	Disables Cleaner function	Selectable
Actua In	Manually trigger Actuator to 'in' (home) position*	Selectable
Actua Out	Manually trigger Actuator to 'out' (extended) position*	Selectable

Actuator

Sub-Menu	Description	Options
Act Max Act Min	Adjust the default swing position (Max) and Home position (Min	Adjustable (mm)
Cycle	Set timer in minutes between Actuator swings	Adjustable
VoltCutOff	Set minimum voltage present before Actuator action is cancelled and error message ActuatorErr or ActuatorVsErr is displayed on screen	Default 14V

**If testing with these parameters you must follow this sequence for the Actuator to function correctly*

- *Select 'Actua Out'*
- *Select 'Actua In'*
- *Select 'Actuator'*

The Actuator must be returned to 'In' mode before activating the auto cleaning function for standard operation.

Advanced

The Advanced menu contains parameters for Gain control, manually adjustment of speed of sound, offset and restoring the amplifier and transducer to their default state.

These settings typically do not require adjustment unless there are special circumstances. Do not adjust Advanced settings without expert knowledge or consulting your local representation.

Parameter	Description	Options
Gain4	Primary sensitivity adjustment. This value is automatically(1) set by the selected Interface range in Quickset. Higher values for lighter densities.	Adjustable
GainStep3	Adjustment of sensitivity for DistStep3 zone.	Adjustable
DistStep3	Depth of zone measured from the sensor face for non-variable GainStep3.	Adjustable
SlopeInc	Increase or decrease Gain-Over-Distance bias(2)	Adjustable (default 1.5%)
Threshold	Minimum echo size which the unit will accept as a valid echo	Adjustable
EmptyDist	Unit will not consider any echoes beyond this distance valid. This is automatically calculated by the 'Low Level' parameter.	Adjustable
Temp Trim	Create manual measurement offset for a specific temperature.	Adjustable
Dist Trim	Create manual measurement offset for a specific distance.	Adjustable
Velocity	Adjusts the internal speed of sound calculation.	Adjustable

(1) Gain4 default settings

Interface Selected (g/l)	Default Value
0.1 - 0.6	24.9%
0.6-1.2	14.9%
1.2-3.0	10.0%
3.0-6.0	4.9%
6.0-10.0	2.0%
10+	1.1%

(2) Gain-Over-Distance bias

The ORCA system uses automatic Gain control to enhance signal tracking during difficult process conditions. Increasing SlopeInc% from 1.5% to 2%-4% will assist the unit to place emphasis on deeper measurement (bed level). If the unit is locking to a higher interface during sliming or difficult conditions try increasing this value. Do not exceed 4%. See 'Troubleshooting' for more information.

Relay Actions

Sub-Menu	Description	Options
RlyL1 1-5	Adjust Relay switch point (L1 must be < L2)	Adjustable
RlyL2 1-5	Adjust Relay switch point (L2 must be > L1)	Adjustable

Set Relay Parameters in Output Adjustment menu

The two relay levels are RlyL1 and RlyL2

The display will show RlyL1 1, the last 1 indicated the Relay number (eg 1 to 5)

L1 and L2 distances are measured from the transducer face

L1 must be equal to or less than L2.

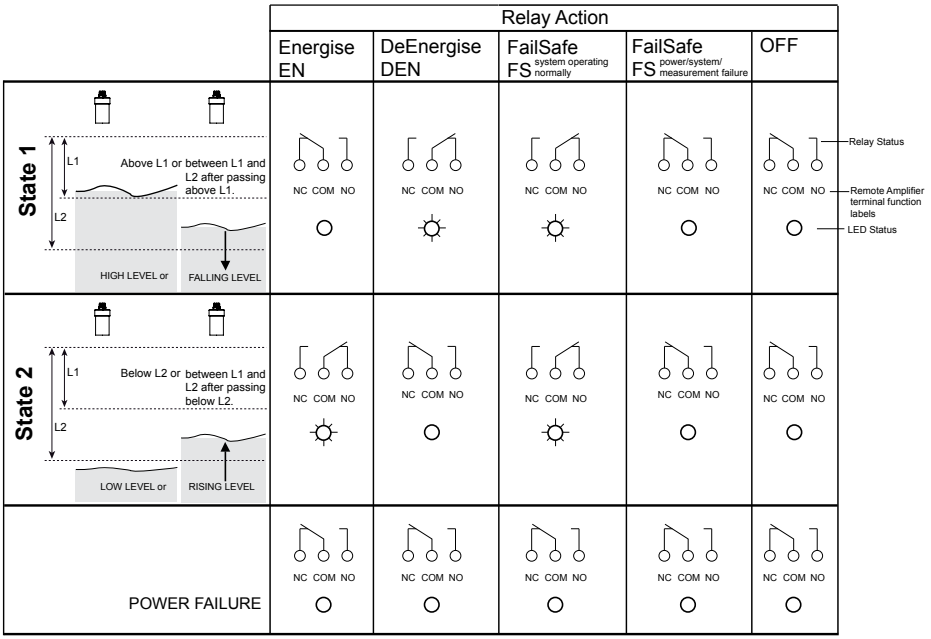

Operating State

In this operational state you can use the  buttons to navigate through and view unit diagnostics and other measurements.

Diagnostic	Typical Reading	Description
Bed	Distance	Bed indicates Bed height measured from Low Level
Level		Depth indicates depth of measured Density measured from the transducer face
Bed%	%	Height of bed level proportionally based on High & Low level
Tx	1	Address of Transducer (default 1)
Normal	Distance	Unit is operating normally
Recover		Unit is searching for new signal
Failed		Unit is in failsafe mode
W (down)	Distance	Tracking Window end point (measured from sensor face)
W (up)	Distance	Tracking Window start point (measured from sensor face)
T:	23.8	Measured Temperature
N:	0.00%	Noise (electrical and frequency interference)
R:	0.00%	Current Recover Gain added
G:	24.6%	Total amount of Gain applied to track current echo
S:	1.60V	Signal size in Volts
E:	Distance	Non-damped measured distance measured from sensor face down

How To Set Up The Unit - Bed Level + Hindered / Settling Layer Measurement

Parameters for standard setups are located in the '**Quickset**' menu.

You will need to program the following parameters:

- App Type - High & Low Level, Density, Bed Depth

- App Type2, High & Low Level2, Density

A) **High** and **Low Level** should be the same for both **App Types**. **High Level** should not be less than 0.600m (2ft).

B) Set **App Type** to '**Bed**' with **Density 10+g/l**. This applies our pre-set parameters to measure the Bed level with the first output.

Set Bed Depth - see Bed Depth(1)

Set **App Type2** to '**Floc**' with **Density 0.6-1.2g/l**. This applies our pre-set parameters to measure the hindered/settling layer to target with Floc control.

App Type Notes

App Type is the primary measurement.
If measuring Bed level it should always be set to Bed level. Density of 10+g/l is the optimum setting to penetrate suspended material to the Bed.

(1) Bed Depth

Bed Depth should be programmed to 1m (3ft) higher than the application expected maximum depth.

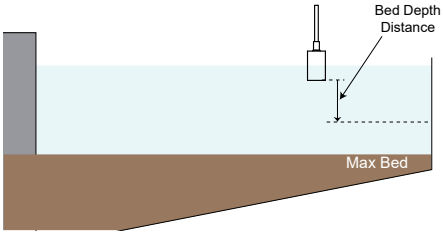

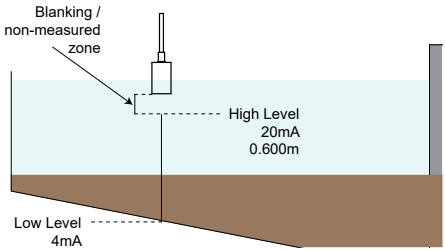

App Type2: Additional Settings

SmplRate - App Type2 is measured at a time based interval. This can be reduced as low as 0.5mins (30 seconds)

Damping2 - Along with reducing **SmplRate** time, increasing **Damping2** will provide a smoother output trend.

Calibr% - To see a lighter interface increase the **Calibr%** parameter. Use 1% intervals and press **CAL** to fire test pulses. This will return the depth of the measured interface and signal size. Target 1V+ signal at preferred depth. Higher% makes the unit more sensitive to lighter material. Fire several pulses with each adjustment.

How To Set Up The Unit - Bed Level + Clarity

Parameters for standard setups are located in the '**Quickset**' menu.

You will need to program the following parameters:

- App Type - High & Low Level, Density

- App Type2, High & Low Level2

A) **High** Level for **App Type** should not be less than 0.600m (2ft). High and Low level for Clarity is represented as a %. 0% poor Clarity, 100% optimal Clarity.

B) Set **App Type** to '**Bed**' with **Density 10+g/l**. This applies our pre-set parameters to measure the Bed level with the first output.

Set Bed Depth - see Bed Depth[(1)]

Set **App Type2** to '**Clarity**'. This programs output 2 for a proportional 0-100% representation of Clarity.

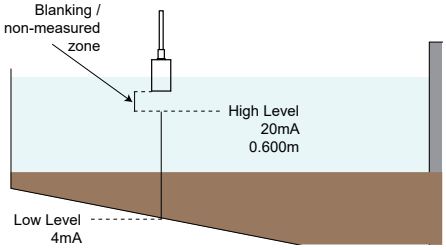

(1) Bed Depth

Bed Depth should be programmed to 1m (3ft) higher than the application expected maximum depth.

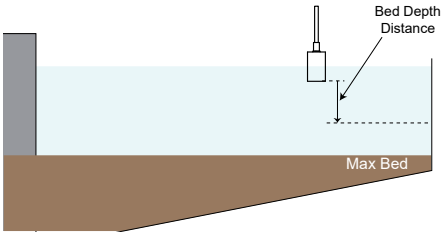

How To Set Up The Unit - Hindered Layer + Clarity

Parameters for standard setups are located in the '**Quickset**' menu.

You will need to program the following parameters:

- App Type - High & Low Level, Density

- App Type2, High & Low Level2

A) **High** Level for **App Type** should not be less than 0.600m (2ft). High and Low level for Clarity is represented as a %. 0% poor Clarity, 100% optimal Clarity.

B) Set **App Type** to '**Floc**' with **Density 0.6-1.2g/l**. This applies our pre-set parameters to measure the Bed level with the first output.

Set **App Type2** to '**Clarity**'. This programs output 2 for a proportional 0-100% representation of Clarity

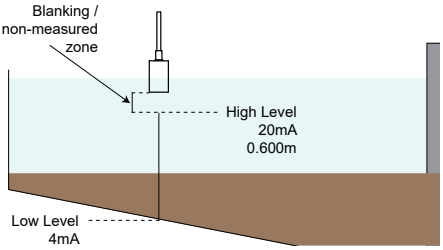

Unit Is Measuring Incorrect Bed or Space

- Confirm display mode is correct
- Space is measured from sensor face to target. Bed is measured from low level to target
- Confirm High Level, Low Level and Bed Depth (if applicable) match application requirement
- Increase or decrease 'Gain4'. Increasing this value makes the unit more sensitive to interfaces within the tank and vice versa. Programming 'Bed Depth' sets Gain4 to a recommended value based on the expected depth of the Bed level
- The Parameter Slope Inc% (Advanced Menu software rev 5.81) can be used to put more emphasis on deeper measurement - increase this to 3%
- High volumes of poor settling or suspended material with attenuate the Sonar pulse. The unit may read higher tracking suspended material if process conditions in the tank fail.

PLC Indication Does Not Match Measurement

- Disconnect the analogue wires from the amplifier. Use a multimeter on the 4-20mA terminals labeled IS and + to read the direct mA from the unit. Reconnected analogue wires and compare this value with the reading from the control system
- Confirm High Level and Low Level are set to the same values in amplifier and control system.

Some Menu Options Are Missing

- HAWK is constantly updating and improving the design and accessibility of its products and as a result older units may have different software. Contact your local representation for information on updating to the latest software.

Error Codes

Error 01

Amplifier/Transmitter can not communicate with transducer.

- Wiring: Check the terminals for a loose or incorrect connection (including junction box/cable extensions)
- Check the cables for any signs of damage
- Ensure any customer supplied cable meets HAWK specifications
- If using junction box extension trace the 8-10VDC from the red/black amplifier terminals to the transducer to ensure wires are correct
- If using a junction box ensure you follow HAWK specification for extending cable
- '**Unit Specs & Checks'** has additional checks for causes of Error 01.

Error 02

Communication data corruption between Transmitter and Transducer.

- It can be a result of noise in data lines or one of data lines (white or blue) being open circuit.
- Make sure wiring is correct especially look to the screen (earth)
- Ensure you are using quality shielded instrument cable
- '**Unit Specs & Checks**' has additional checks for causes of Error 02.

Error 03

- Specific comms mode is selected (eg Profibus, FF) but comms module is not connected or responding
- Check your unit part number to ensure it has correct comms
- If you do not have additional comms (part number option X) then select Modbus.

Error 04

Amplifier is programmed with incorrect software or has wrong hardware connected.

- Contact your local support.

ActuatorErr

Before the Actuator sweeps the ORCA will check the incoming voltage to confirm it is not less than the **VoltCutOff** parameter value. If it does detect the error it will display **ActuatorErr** for a few seconds on the LCD. Confirm 24VDC power supply is per spec (min 5A at the terminal).

ActuatorVsErr

If the voltage drops below the **VoltCutOff** parameter value during an attempted Actuator swing the ORCA will display **ActuatorVsErr** for a few seconds on the LCD. Confirm 24VDC power supply is per spec (min 5A at the terminal).

Error 08

- Transducer type mismatch.

Error 09

- NV ram corrupted.

Error 10

- NV write error

Error 11

- Transducer no. 2 communication error (cannot talk to the sensor)

Error 13

- Voltage error. Input voltage too low or voltage error.

Unit Specs & Health Checks

OSIR Transmitter

Specified ranges (supply dependent): 90-260VAC, 24-30VDC, 30-48VDC). For suspected power issues ensure user supply is appropriate & consistent. **If using VDC ensure minimum 24V 5A supply is present or the actuator cleaning will not operate.**

If using AC power you can check the power supply for faults by reading the DC +/- terminals with a multimeter set to DC. This terminal will produce 15-16VDC stable. If this value is lower or inconsistent you may a problem with the internal power supply.

Unit performance will be affected if the unit detects voltage below 9VDC. If 'V in chk' is on the unit will trigger its failsafe routine. If V in chk is off the unit will display V fail on the LCD.

Transducers

The Transducer power (red wire) should draw 8-10VDC. If this figure is too high or too low check ORCA power & supplied power as above.

Disconnect transducer from amplifier.

There should be no open circuits between wires. Resistances between transducer wires (approximate values):

Blue - White	32kohm
Black - Blue	15.6kohm
Black - Red	1-2Mohm (or OV / high resistance)
Black - White	15.6kohm

If any are open circuit check wiring connections or there may be a problem with the transducer.

Transducer problems may exhibit via the amplifier protecting itself against high current draw - measure resistance across transducer: Red and DC:+ terminals on the amplifier while the transducer disconnected and then connected. If the resistance increases dramatically there is potentially a wiring or transducer problem.

OSIRSCA (Electric Actuator)

Actuator position - disconnect the actuator wires and read for the following values:

Default (pole should be vertical)

Black - Blue	2kohm
Blue - Brown (Red)	8kohm
Black - Brown (Red)	10kohm
Note: Lines 1 & 2 add to total of 10kohm	

Peak extension (default parameters)

Black - Blue	4kohm (approx)
Blue - Brown (Red)	6kohm (approx)
Black - Brown (Red)	10kohm
Note: Lines 1 & 2 add to total of 10kohm	

Voltage draw during swing out:in - at the terminals (all wires must be connected to amplifier).

Green - Yellow	26VDC: -26VDC

Note: The 'Actuator' LED turns on during the swing process. If the swing fails the light stays on.

ORCA Electric Actuator Troubleshooting

The ORCA Sonar system is often used with an electric actuator, powered and controlled by internal electronics in the ORCA Transmitter. This section describes several tests which can be made on the complete system, and on the individual parts, to try to identify the cause of a problem where a unit seems not to be operating correctly.

If the Cleaner LED is illuminated with no Actuator movement the ORCA Transmitter has attempted to drive the Actuator but the action failed.

Wiring Checks: Confirm there are no loose or misplaced wires.

Power Supply: Ensure that power supplied to the instrument is within the specifications given (see unit specs & health checks). **If DC power is used, then the current capacity of the DC supply wiring is critical.**

Mechanical Checks:

Ensure that the actuator, bracket, transducer mounting pipe and hinged clamps are assembled correctly and that the pinch bolts which secure the hinged clamps to the transducer mounting pipe are firmly tightened. Correctly assembled hinges should move very freely before the transducer mounting pipe is inserted.

Software Settings:

To check for correct operation of the actuator go to the ‘Cleaning’ parameter under ‘OutputAd’ and select ‘Actua Out’, then press CAL. The actuator should move the transducer out to its end stop setting. Return to the ‘Cleaning’ parameter and select ‘Actua In’. The actuator should move the transducer back in to its home position. Return to the 'Cleaning' parameter and finally select ‘Actuator’ for the standard automatic operation mode.

If the actuator does not move correctly or jitters:

If the actuator still does not operate when commanded manually first attempt to reset the international potentiometer.

This is done by applying voltage directly to the Actuator wires: Disconnect the Green and Yellow wires from the transmitter. Apply 24VDC directly to these wires (Yellow positive, Green negative). This will drive the actuator. After the extension stops, remove the direct 24VDC. Re-connect the green and yellow wires to the transmitter. After the unit attempts a **second** cycle it will have detected the Actuator at full extension and then attempt to retract it to the default Start position.

If the Actuator still does not retract to the correct home position connect a different power source to the ORCA transmitter. Re-confirm the resistance and voltage specifications are measured as per listed in the **'Unit Specs and Health Checks'** section.

If the Actuator still does not function correctly you may need to replace the Actuator.

Remote Electronics

Model

OSIR Sonar Level Transmitter, 3 relay alarms

Power Supply

B 24-30VDC (min 5A)

D 90-250VAC and 24-30VDC (min 5A)

Additional Communications (PC comms GosHawk standard)

X 1 x 4-20mA analog output module with Modbus

Y 2 x 4-20mA analog output modules with Modbus Comms

I 1 x 4-20mA analog output module with Modbus and HART

J 2 x 4-20mA analog output module with Modbus and Dual Channel HART

A Profibus PA

P Profibus DP

F Foundation Fieldbus

D DeviceNet

E 2 x 4-20mA with Modbus over Ethernet

R 2 x 4-20mA with Modbus over Wi-Fi

B 2 x 4-20mA with Modbus over Bluetooth

N/A

X Not Required

OSIR	D	Y	X

Remote Sonar Transducer

OSIRT ORCA Sonar Transducer

Transducer Strength
3 Industrial / Mining

Transducer
02 (150kHz)

Facing & Housing material
SH Full fiberglass high temperature version (max 80°C 180°F)

Approval Standard
X Not Required

Connection
C IP68 Sealed with cable

6 6m cable
15 15m cable
30 30m cable
50 50m cable

FRP Full transducer / pole FRP fibreglass encapsulation (requires OSIRMELxH) consult factory

OSIRT	3	02	SH	X	C	6

Remote Sonar Transducer With IECEx / ATEX Approval

AWRTSH ORCA Sonar Transducer

Transducer Type
002 150kHz

-

Facing & Housing material
8 Full fiberglass high temperature version (max 80°C 180°F)

XXXXX

Approval Standard
i0 IECEx Zone 0 (Ex ia IIA T4 IP68 Tamb -20°C to 70°C)
A0 ATEX Grp II Cat 1 GD EEx ia IIA T4 IP68 (Tamb -20°C to 65°C)

Connection
C IP68 Sealed with cable

6 6m cable
15 15m cable
30 30m cable
50 50m cable

AWRTSH	002	-	8	XXXXX	i0	C	6

Remote Sonar Transducer With CSA Approval

AWRTSH ORCA Sonar Transducer

Transducer

302 150kHz for Industrial / Mining

Facing & Housing material

SH Full fiberglass high temperature version (max 80°C 180°F)

Approval Standard

RN CSA Class I; Div 1/2; Group D; Zone 0; AEx/Ex ia IIA; T4

Connection

C IP68 Sealed with cable

- 6 6m cable
- 15 15m cable
- 30 30m cable
- 50 50m cable

FRP Full transducer / pole FRP fibreglass encapsulation (requires OSIRMELxH) consult factory

AWRTSH 302 SH RN C 6

Automatic Scum Cleaner

OSIRSC Automatic Scum Cleaner

Type

- A 24VDC Electric Actuator with Mounting Bracket Kit
- A-L 24VDC Electric Actuator with Mounting Bracket Kit with Left Aligned Transmitter Mounting Bracket
- D Floating Sonar with 24VDC Electric Actuator and Mounting Bracket Kit
- E2 Impact Plate Dual Direction with Mounting Bracket Kit
- G Mounting Bracket Kit only

OSIRSC A

Mounting Extension Pipe

Mounting Extension Pipe

OSIRMEL Mounting Extension SS Pipe

Length

2 2 meters

3 3 meters

4 4 meters

5 5 meters

H Full transducer / pole FRP fibreglass encapsulation (consult factory)

OSIRMEL 2

Mounting BracketT Kit
OSIRSCG

HAWKLink USB PC connector for GosHawkII
HAWKLink-USB

Stainless Steel Sunhood
SUNHOOD

Extra Cable (Belden 3084A)
CA-TXCC-R-C15 15m cable
CA-TXCC-R-C30 30m cable
CA-TXCC-R-C50 50m cable
CA-TXCC-R-C100 100m cable

Mounting Pipe - Transducer connection adapter
ADP-SS-SA-TC

Sonar Frequency Selection

• 150kHz

Operating Voltage

• 90 - 260Vac 50 / 60Hz
• 24Vdc (min 5A supply)
• Residual ripple no greater than 100mV.

Power Consumption

• <10VA @ 240Vac
• <10W @ 24Vdc.

Analogue Output

• Either single or dual analogue
1 x 4-20mA (isolated) 600 ohms max
1 x 4-20mA (non isolated) 600 ohms max.

Communications

• GosHawk, HART, Modbus, Profibus DP, DeviceNet, Foundation Fieldbus, Profibus PA.

Relay Output

• 3 x s.p.d.t. 0.5amp / 240vac
• Form c. type non-inductive load
• Fully programmable.

Maximum Range

• 25 meters.

Blanking Distance

• 450mm: 150kHz.

Resolution

• 1mm.

Accuracy

• +/- 0.25%

Operating Temperature

• Remote Electronics: -40°C to 70°C
• Sonar Transducer FRP Fibreglass: -40°C to 80°C.

Transducer / Transmitter Separation

• Up to 500m
Note: Must be BELDEN 3084A or equivalent

Cable (Sonar Transducer)

• BELDEN 3084A.

Sealing

• Remote Electronics IP67
• Remote Transducer IP68.

Cable Entries

• Remote Electronics: 3 x 20mm 1 x 16mm.

Typical Weight

• Remote Electronics 1kg
• Remote Transducer 1kg
• Cleaning Mechanism 5kg.

Warranty and Liability

HAWK specializes in ultrasonic, sonic and sonar level transmitters and have thousands of installed instruments in critical applications around the world.

HAWK guarantees the **'ORCA'** sonar range, when delivered, is free of material defects and undertakes to replace, repair any defective part, free of charge. HAWK will provide two levels of warranty period.

A one year electronic warranty period extends from this delivery date. HAWK warranty, solely covers, workmanship, material defects, only, unless specified in writing by the factory.

The warranty does not cover, wearing parts, consumables, incorrect handling, incorrect installation, or using the instrument for anything other than what it is intended to do.

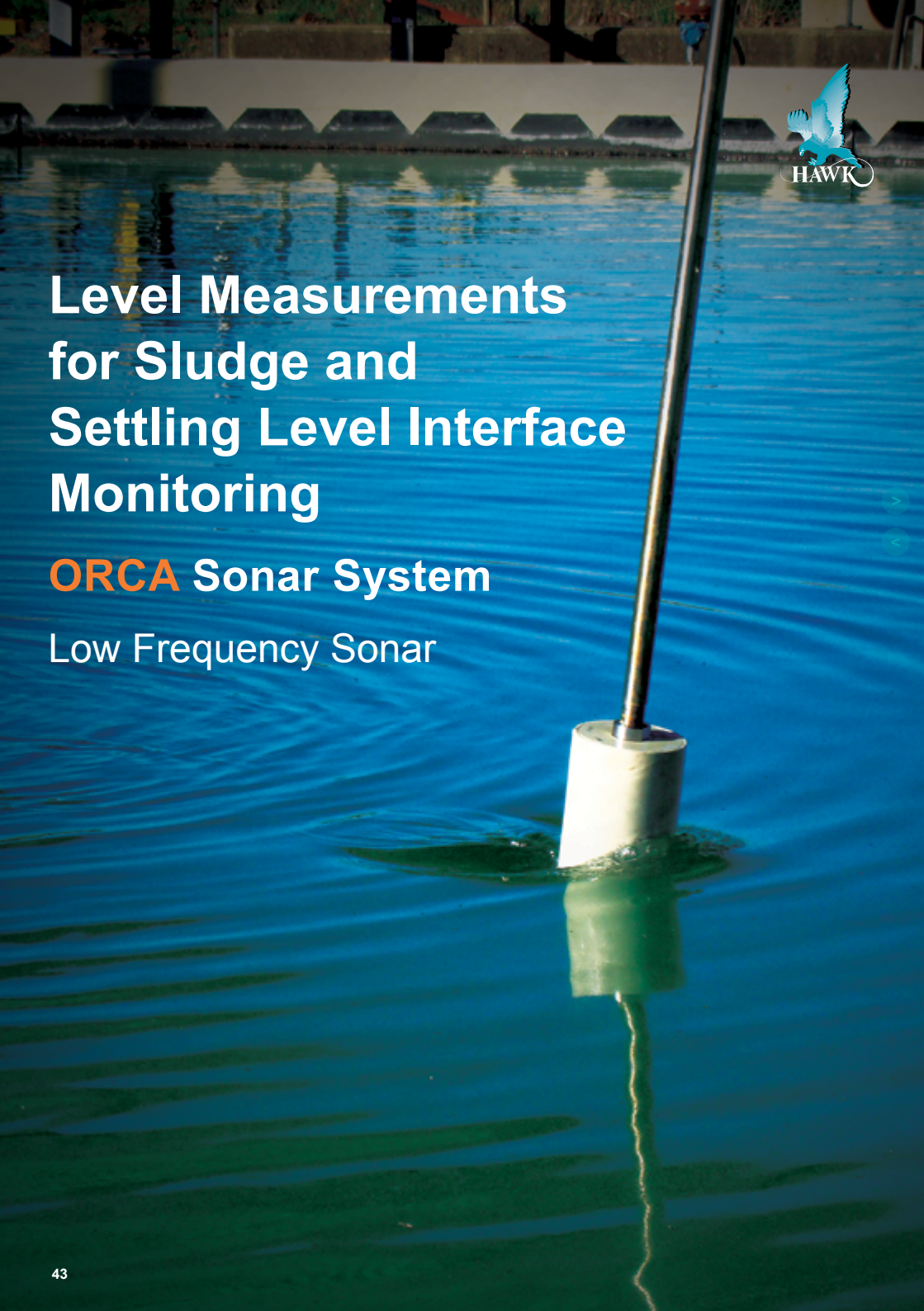

Level Measurements for Sludge and Settling Level Interface Monitoring

ORCA Sonar System

Low Frequency Sonar

HAWK, Since 1988

Hawk Measurement Systems Pty Ltd (HAWK) was established in 1988. It's founding members saw the universal requirement of various industries requiring improved process control and efficiency in their operations.

We Can Help

HAWK understands the difficulties customers face when seeking accurate level measurement. Every application is different, involving a multitude of environmental factors. This is where HAWK excels. Our aim is to ensure that customers feel comfortable with our technology, and are provided with long term and reliable solutions. We believe that a combination of application and product expertise, as well as forward thinking and proactive support policies are the foundation of successful customer-supplier relationships.

Progressive Technical Support

HAWK believes that the future of the Level Measurement Industry revolves around the quality of pre and post sales - support. Our aim is for all sales & support staff to be product experts, and more importantly application experts making our customers applications as efficient and consistent as possible.

Remote Innovation

HAWK understands the need for immediate technical assistance.

The HAWKLink 4G communication device allows any computer with internet access and our free GosHawk diagnostic & calibration software; to dial in, calibrate, test, and check the performance of HAWK products. This innovative system allows our Global Support Team to assist with commissioning and after sales service of HAWK equipment worldwide. Measurement problems are addressed as they happen; not days or weeks later.

Knowledge Sharing

HAWK believes that knowledge sharing is key to creating long term relationships. Empowering our customers and our worldwide distribution network, whilst being available at all times to lend a helping hand, is the perfect recipe for long term solutions and relationships. HAWK openly extends an invitation to share our 30 plus years of level measurement experience, and ensure that your day to day processes are efficient, understood, and always working.

All company or product names are registered trademarks or trademarks of their respective owners.

Hawk Measurement Systems
(Head Office)
15 - 17 Maurice Court
Nunawading VIC 3131, AUSTRALIA

Phone: +61 3 9873 4750
Fax: +61 3 9873 4538
info@hawk.com.au

Hawk Measurement
5010 Gateway Drive, Medina,
OH 44256, USA

Phone: +1 888 HAWKLEVEL (1-888-429-5538)
Phone: +1 978 304 3000 / +1 877-356-5463
Fax: +1 978 304 1462 / +1 330-331-7172
info@hawkmeasurement.com

For more information and global representatives: **www.hawkmeasurement.com**

DOC-OS-MAN v 1.28 0324