A Higher Level of Performance

Manual

OptioLaser

L200

Level, Distance & Position Measurement
of Solids and Liquids



For more information, please visit >

www.hawkmeasurement.com

Table Of Contents

Overview 3
Principle of Operation 3
Applications 3
Features 3
Quick Start Guide 4
Connections & Instructions for Safe Use 6
Connections & Instructions for Safe Use & Labels 7
Laser Radiation Information 7
Labels 7
Apendix A 8
Specifications 8
Apendix B 9
Dimension Drawings 9
Part Numbering 10

PROPRIETARY NOTICE

The information contained in this publication is derived in part from proprietary and patent data. This information has been prepared for the express purpose of assisting operating and maintenance personnel in the efficient use of the instrument described herein. Publication of this information does not convey any rights to use or reproduce it, or to use for any purpose other than in connection with the installation, operation and maintenance of the equipment described herein.

WARNING

This instrument contains electronic components that are susceptible to damage by static electricity. Proper handling procedures must be observed during the removal, installation, or handling of internal circuit boards or devices:

Handling Procedure:

1. Power to unit must be removed prior to commencement of any work.
2. Personnel must be grounded, via wrist strap or other safe, suitable means, before any printed circuit board or other internal devices are installed, removed or adjusted.
3. Printed circuit boards must be transported in a conductive bag or other conductive container. Boards must not be removed from protective container until the immediate time of installation. Removed boards must be placed immediately in a protective container for transport, storage, or return to factory.



Principle of Operation

The OptioLaser L200 uses time-of-flight laser technology for continuous non-contact distance or level measurement. Able to measure to any solid or liquid surface, at any angle, the L200 an ideal sensor for level, positioning and detection applications.

Applications

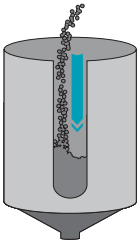

Level control

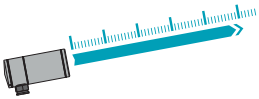

Distance measurement

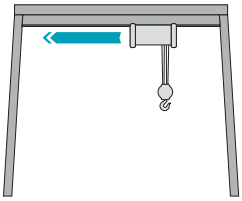

Positioning

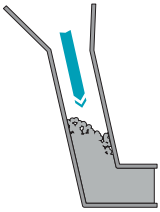

Blockage detection

Features

- Non-contact measurement with laser technology
- Level, distance & position measurement of solids and liquids
- 303 Stainless steel housing
- Measurement range up to 100 m (328')
- Continuous measurement, 10 mm (0.39") resolution
- NAMUR compliant 4 … 20 mA output
- 2 Normally open relay outputs
- Easy configuration via USB
- 220 / 110 V ac or 24 V dc power supply
- Visible aiming pointer

1. CAUTION - The OptioLaser L200 Sensor contains a laser. Do not look at the beam directly with optical instruments.
2. Download the Laser Terminal Software from hawkmeasurement.com/downloads/
3. Open the Laser Terminal Package and follow the installation instructions.
   Everything needed for communicating with the L200 will automatically be installed.
4. Plug a USB cable into the USB A connector in the terminal compartment of the L200 .
5. Plug the other end of the USB cable into a PC and the L200's LED indicators will light up.
6. Open Terminal software on the PC, a connection with the L200 will automatically be established using baud rate of 115200,8,n,1.
7. Click the "Connect" icon to open a communications port and the distance measured in meters, the milliamp output and the signal strength as a percentag will begin to scroll in the Terminal window.
8. If an automatic connection is not created, click the "Laser" icon and select the appropriate USB port and 115200 baud rate.
9. To access the configuration settings menu of the L200, press the <CORRESPONDING> key on the keyboard:

Menu	Selection	Default	Description
<A> 4 … 20 mA settings	<B> 4 mA	25.00 m	Enter the distance corresponding to the 4 mA output value.
	<C> 20 mA	0.60 m	Enter the distance corresponding to the 20 mA output value.
	<D> Fail safe current	> 21.0 mA	Enter the failsafe condition of the 4...20 mA range for alarm indications.
	<E> Test	21.50 mA	Output test of the 4 ... 20 mA.
<F> Relay settings	<G> Relay A switch point 1	1.00 m	First distance at which Relay A activates.
	<H> Relay A switch point 2	2.00 m	Second distance at which Relay A activates.
	<I> Relay A mode	near => closed far => open	Select polarity of the relay
	<J> Relay B switch point 1	1.00 m	First distance at which Relay B activates.
	<K> Relay B switch point 2	2.00 m	Second distance at which Relay B activates.
	<L> Relay B mode	near => closed far => open	Select polarity of the relay
	<M> Relay test	A:closed B:closed	Tests relay functionality.

Menu	Selection	Default	Description
<N> System settings	<O> Measuring units	meters	Enter the required measuring units, either meters or feet.
	<P> Zero distance offset	0.00 m	Enter the distance corresponding to the zero datum trim.
	<Q> Lost signal timeout	4.0 sec	Enter the lost signal hold time delay in seconds.
	<R> Smoothing filter	ON	Turns the smoothing filter OFF (raw) or ON (filtered).
	<S> Filling rate filter	OFF	Turns the filling rate filter OFF (fast filling) or ON (slow filing).
	<U> Moving obstacle filter	ON	Turns the moving obstacle filter OFF (raw) or ON (reject obstacles).
	<V> Obstacle filter size	16 results	If the “Moving obstacle filter” is ON, this buffer allows for selection of the number of results used to reject obstacles.
	<W> Visible aimer	OFF	Turns the visible aiming laser OFF or ON.

10. Press the appropriate keyboard key to select a menu item, e.g. type <A> for “a: Hide 4-20 mA settings” to show or hide the 4-20 mA settings menu.
11. To restart measurements, press the <SPACE> keyboard key.
12. To save a copy of the current screen data, click the “Save” icon.
13. If you wish to start recording data, click the “Log” icon.
14. To clear the screen of measurement data, click the “Clear” icon.
15. Once you have configured the L200 , click the “Disconnect” icon and disconnect the USB cable from the unit.
16. Connect the 220 / 100 V ac or 24 V power supply, the 4 … 20 mA output, and the relays, as necessary for your application.

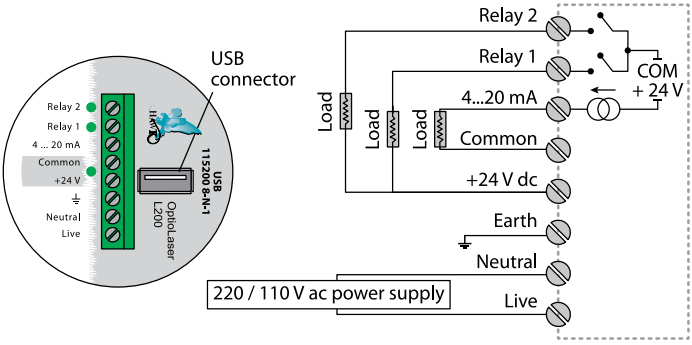

Figure 1 :: Connection diagram

The L200 is a laser rangefinder that emits ionizing laser radiation from its measuring laser. The level of the laser emission from the measuring laser is Class 1M which indicates that the laser beam is safe to look at with the unaided eye but must not be viewed using binoculars or other optical devices at a distance of less than 15 meters. Notwithstanding the safety rating, avoid looking into the beam and switch the unit off when working in the area.

CAUTION -- The use of optical instruments with this product will increase eye hazard.

The L200 also contains an aiming laser that emits visible laser radiation when switched ON. The level of the laser emission from the aiming laser is Class 2 which indicates that the laser beam must not be stared at with the unaided eye.

CAUTION — DO NOT STARE INTO THE BEAM

The L200 should not be disassembled or modified in any way. The laser eye safety rating depends on the mechanical integrity of the optics and electronics so if these are damaged do not continue using the L200. There are no user serviceable parts and maintenance or repair must only be carried out by the manufacturer or a qualified service agent. No regular maintenance is required for the L200 but if the lenses start to collect dust then they may be wiped with suitable lens cleaning materials. Make sure that the L200 is switched OFF before looking into the lenses.

The L200 should be mounted using the four holes provided in the circuit board. Do not hold or clamp the lens tubes as this may cause damage and adversely affect the laser safety rating.

Laser Radiation Information

Specification	Measuring laser's value / AEL	Aiming laser's value / AEL	Notes
Laser wavelength	905 nm, pulsed	670 nm, CW	
Pulse width	< 20 ns		
Pulse frequency	< 36 kHz		
Peak power	< 10 W	0.0008 W	50 millimeter aperture at 2 meters
Average power	< 0.6 mW		7 millimeter aperture
Average energy per pulse	< 300 nj		
NOHD	15 m		Distance beyond which binoculars with may be used safely

Labels

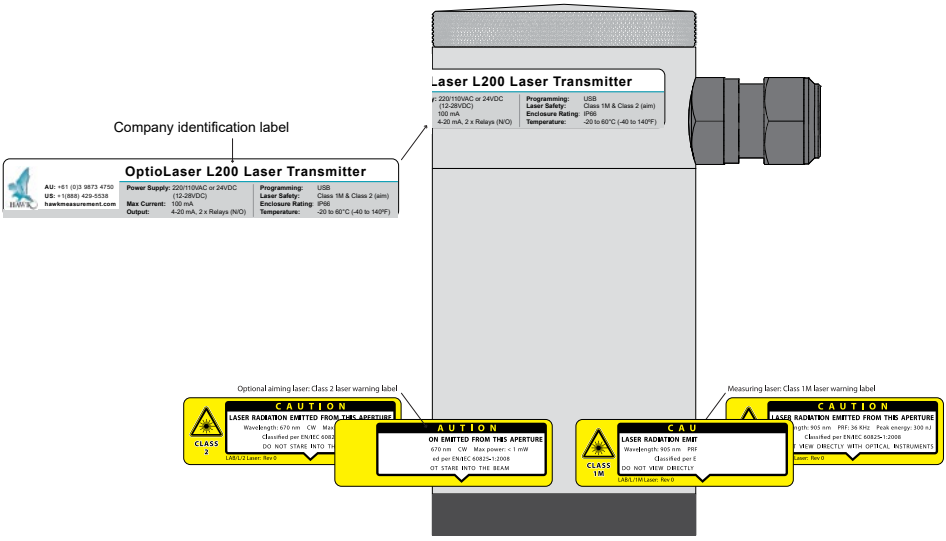

Figure 2 :: Labelling on the OptioLaser L200

Specifications

Performance data		
Sensing range	0.3 ... 100 m (0.98' ... 328')	
Resolution	10 mm (0.39")	
Accuracy	<0.1% of full range at 20°C	
Update rate	5 readings per second	
Technical data		
Power supply	220 / 100 V ac or 24 V dc nominal (12 ... 28 V dc)	
Current consumption	100 mA nominal	
Output		
Analog	4 ... 20 mA NAMUR compliant self-powered & non-isolated. 2 x Relays (N/O), 60 V dc at 3.5 A.	
Communication	USB at 115200 baud 8-N-1	
Mechanical data		
Diameter	L200 : 88.9 mm (3.5")	L200/DT: 140 mm (5.51")
Length	L200 : 180 mm (7.09")	L200/DT: 110 mm (4.33")
Weight	L200 : 2.7 kg (5.59 lb)	L200/DT: 0.7 kg (1.54 lb)
Connection	Flange accessory (L200 /DT) with 4 Ø 8.5 mm holes on 120 PCD	
Housing material	303 Stainless steel	Powder coated stainless steel
Optical data		
Laser power	Measuring laser: 15 W (peak)	Visible aiming laser: < 5 mW red
Optical aperture	75 mm (2.95")	
Beam divergence	< 1° to half power points	
Lens material	Impact resistant acrylic	
Laser safety classification	Measuring laser: Class 1M CAUTION: Do not view laser directly with optical instruments.	Visible aiming laser: Class 2 CAUTION: Do not stare into the beam.
Environmental data		
Operating temperature	-20°C ... +60°C	
Pressure	Atmospheric	
Enclosure rating	IP66	

Dimension Drawings

L200

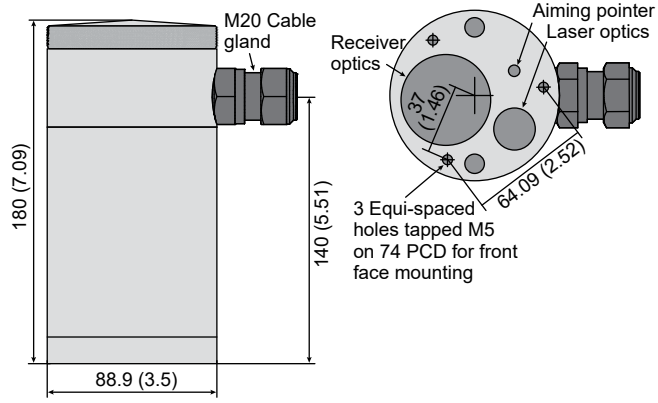

L200/DT

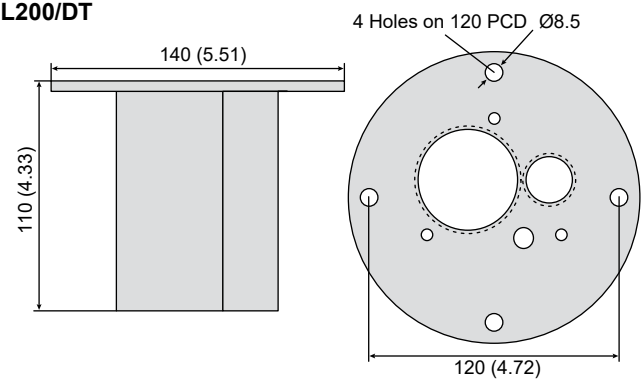

Figure 3 :: Dimension drawings of the L200

OptioLaser L200 Laser Transmitter for Level

Model

L100 OptioLaser Laser Level Transmitter (up to 164ft)

L200 OptioLaser Laser Level Transmitter (up to 328ft)

Dust Tube + USB Programming Cable *(Required for every OptioLaser L100/L200)*

DT Dust Tube, Stainless Steel

Accessories - Handheld Programmer *(Optional)*

HP Handheld Programmer

XX Not Required

Accessories - Swivel Bracket *(Optional)*

SB Swivel Bracket

XX Not Required

L200	DT	HP	SB

OptioLaser L100/L200 Laser Transmitter Spare Parts

Model

LXDT Dust Tube for L100/L200 OptioLaser Laser Level Transmitter

LXHP Handheld Programmer for L100/L200 OptioLaser Level Transmitter

LXSB Swivel Bracket for L100/L200 OptioLaser Laser Level Transmiteer

Hawk Measurement Systems
(Head Office)
15 - 17 Maurice Court
Nunawading VIC 3131, AUSTRALIA
Phone: +61 3 9873 4750
Fax: +61 3 9873 4538
info@hawk.com.au

Hawk Measurement USA
5010 Gateway Drive, Medina, OH 44256, USA
Phone: +1 888 HAWKLEVEL (1-888-429-5538)
Phone: +1 978 304 3000 / +1 877-356-5463
Fax: +1 978 304 1462 / +1 330-331-7172
info@hawkmeasurement.com

For more information and global representatives: **www.hawkmeasurement.com**