A Higher Level of Performance

Instruction Manual

HYDROBAR

WARNING:
Before installing the Hydrobar, read the warnings and advisements on the last page. For personal and system safety, and for optimum performance, make sure you thoroughly understand the contents before installing.

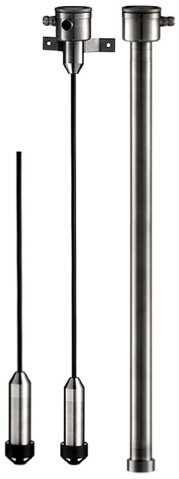

For more information, please visit >
www.hawkmeasurement.com

CONTENTS

Section		Page
1	Description	2
1.1	Description Hydrobar-Cable	2
1.2	Parts description	2
1.3	Barometric reference	3
2	Hydrobar Cable-FR (**Fixed Range**)	3
2.1	Temperature compensation	3
2.2	Wiring Hydrobar Cable-FR (**Fixed Range**)	3
2.3	Barometric reference	3
3	Wiring Hydrobar with zero and span	4
3.1	Calibration	4
3.2	Digital local indicator (Option I)	4
3.3	Power supply/External Load	4
3.4	Hazardous area (Ex-version)	5
3.5	Functional Safety - SIL	5
3.6	Traceability year of manufacturing	5
3.7	CE / EMC Rules	5
4	Marine Applications	6
4.1	Bulkhead Penetration Gland	7
5	Option G59 Junction Box	7
6	Specifications	8
7	Advisements and warnings	9
	Attachment: EU-Declaration of conformity	

1. DESCRIPTION

The Series Hydrobar is a Hydrostatic Level transmitter based upon a bridge resistive silicon sensor, with a very high burst pressure. The amplifier system is based on a single Integrated Circuit (IC), which ensures a perfect linearity in the 4-20 mA output. The Hydrobar has a very strong flush mounted diaphragm from Stainless Steel. The pressure sensor which is placed behind the diaphragm and the transmitting electronics are joined by a cable. The signal from the pressure sensor goes directly to the IC which converts this signal into 4-20 mA. The compact electronics are placed in a **Stainless Steel** housing which can be installed with a wall mounting bracket (AISI 304). The Hydrobar level transmitters are available in cable or pipe extended versions. The cable length (max. 100 meters) or pipe extension (max. 4 meters) has to be specified. Zero and Span are internally adjustable, except for type Hydrobar-Cable-FR. Special cable material can be delivered on request (Hytrel or PTFE (Non Ex)). All versions with separated electronics are standard supplied with a lightning surge protection. Optionally this can be supplied on the Hydrobar-Cable-FR (Option G104, extra price).

1.1 HYDROBAR-CABLE

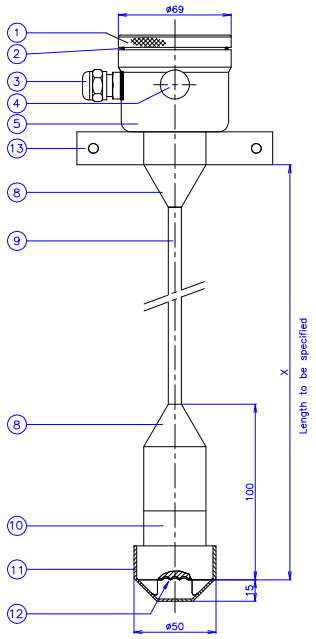

1.2 PARTS DESCRPITION

		MATERIAL
1.	Cover	AISI 304
2.	O-Ring	EPDM
3.	PG9 Cable Gland	
4.	Venting	PA
5.	Electronic Housing	AISI 304
8.	Connection to cable	AISI 316
9.	Cable (Specify length X)	PE*
10.	Sensor Foot	AISI 316
11.	Diaphragm Protection	PE (Polyethylene)
12.	Diaphragm	AISI 316 L
13.	Wall Mounting Bracket	AISI 304

* *Standard cable length (X) is 3 meters.*
Specify length (X) in the order code.

1.3 BAROMETRIC REFERENCE

The Hydrobar is a Relative transmitter. This means that barometric changes will not affect the zero (4 mA). The venting hole (3) is placed at the side of the electronic housing and is the barometric reference to atmospheric pressure. The venting must be kept clean.

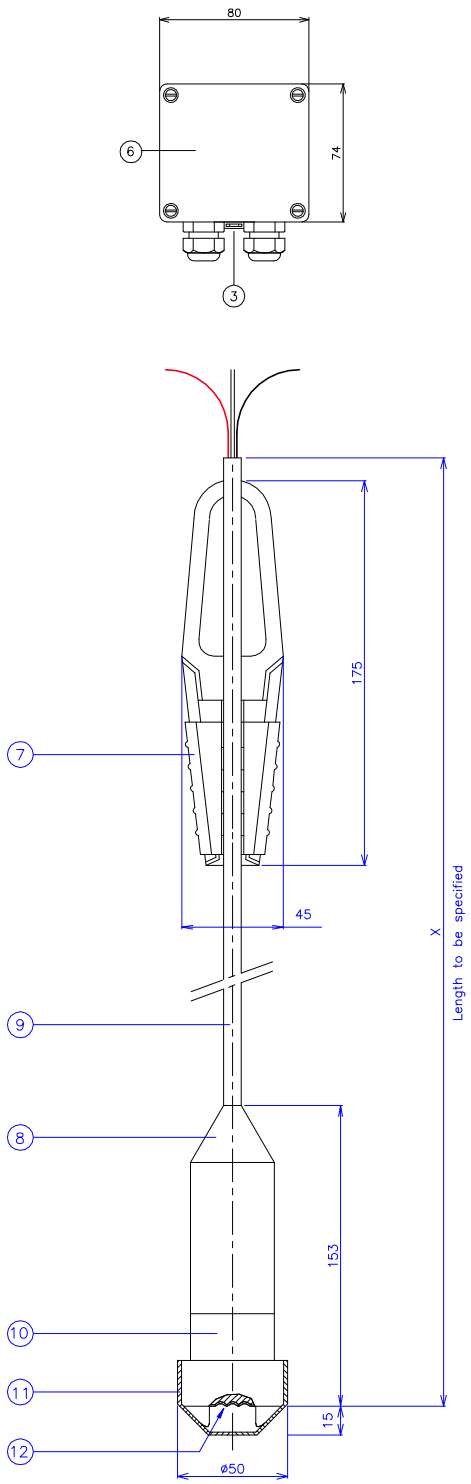

2. Hydrobar-Cable(3m)-FR (Fixed Range)

The Hydrobar-Cable-FR cannot be adjusted by the customer. Every calibration can be chosen between 1 mWC till 100 mWC, and must be done at the factory. The cable material (9) is Poly Ethylene (PE) with a diameter of 10 mm. As standard the cable length (L) is 3 meters. Every cable length is possible but has to be specified in the order code (Length L).

A cable hanger (7) to mount the transmitter on every desired length can be delivered as an option (extra price). The cable hanger is made from AISI 304 and PA.

2.1 Temperature compensation Fixed Range

The temperature compensation from the Hydrobar Cable-FR will be activated if the temperature changes. The output signal from the transmitter needs some time to stabilize. When ΔT is 10°C this takes approximate 5 minutes. We strongly recommend to wait 5 till 10 minutes to check the output signal related to the depth (measuring range) of the transmitter to have a good temperature compensation.

2.2 Wiring Hydrobar-Cable-FR (Fixed Range)

Black wire = –
Red wire = +

2.3 Barometric Reference (Fixed Range)

The Hydrobar-Cable-FR is a Relative transmitter. This means that barometric changes will not affect the zero (4 mA). The venting tube at the end of the cable (9) must be placed in an absolute dry area to prevent moisture coming into the foot (10).

A special junction box (6) can be delivered as an option (extra price). This junction box has a protection of IP66 and has a special venting nipple.

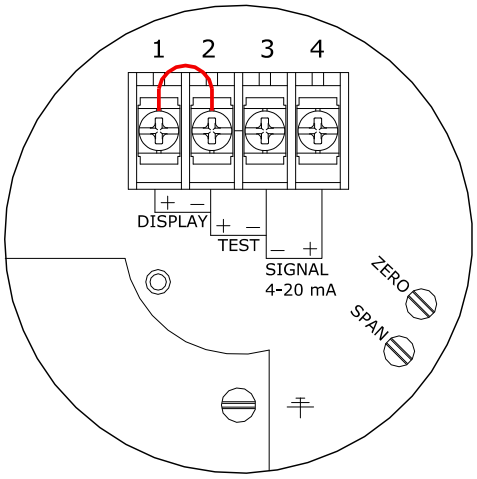

3. WIRING HYDROBAR WITH ZERO AND SPAN

The figure left shows the wiring connection of the transmitter. The 2 wires must be connected to connectors 3 (-) and 4 (+) of the terminal board.

The signal wiring must be shielded and twisted pair yield the best results. **Do not** run signal wiring in open trays with power wiring, or near Heavy electrical equipment (for example: Frequency controllers or heavy pumps). Shielding must always be connected at the side of the power supply. The instrument always needs to be connected to earth.

Please ensure that the instrument is not connected to earth twice to prevent the occurrence of an earth loop.

Care must be taken to assure that the polarity of the power supply is correct, a reversal of wiring polarity will not damage the transmitter, but the transmitter will not function until the wiring is connected correctly.

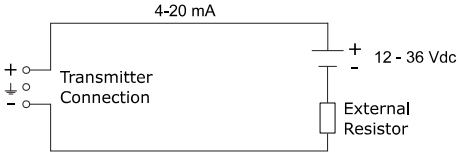

3.1 CALIBRATION

All transmitters are fully calibrated at the factory, to the conditions stipulated in users order. It may be advisable to recalibrate the transmitter after shipment. When the buyer has not requested calibration, the transmitter will be calibrated at the lowest span. Test adaptors for calibration of the Hydrobar are available on request. The connector and **zero**/**span** potentiometers are under the cover.

3.2 DIGITAL LOCAL INDICATOR

The local indicator displays a digital value that is proportional to the pressure measured by the transmitter. The full scale point may be set to any value between 0000 and 1999. The local indicator can be mounted afterwards. Remove the bridge which is placed between connector (1) and (2). Connect the red (+) wire to (1) and the black (-) wire to (2). When using a local indicator the minimum power supply must be > **15,5** Vdc.

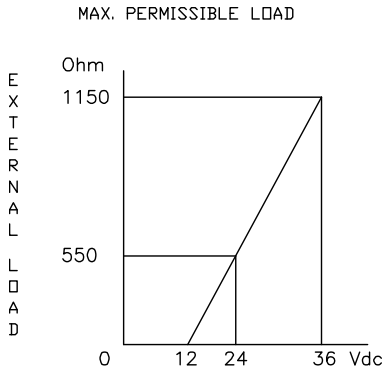

3.3 POWER SUPPLY / EXTERNAL LOAD

The minimum power supply is based on the total circuit resistance. The maximum permissible load (Ri max.) in case of 24 Vdc is 550 Ω. By increasing the power supply, the external load can be increased to 1150 Ω / 36 Vdc. (see figure left).

$$Ri\ max = \frac{Power\ Supply - 12\ \ Vdc\ (min.\ power\ supply)}{20\ mA}$$

3.4 HAZARDOUS AREA

The **Hydrobar-Cable-FR** is also available as an intrinsic safe device (option, extra price) and is certified for applications in hazardous areas. Use a certified power supply, from **17-26,5 Vdc**. For the Hydrobar-cable with separated electronics use a certified power supply, from **13-26,5 Vdc**. When the transmitter is used in such areas, Installation of this device has to be carried out by a certified and qualified mechanic or a certified and qualified installer.

CERTIFICATES

ATEX - **II 1 G Ex ia IIC T4 Ga**
Certificate : KEMA 03ATEX1219 X
$\mathbf{U_i}$ = 26,5 Vdc, $\mathbf{I_i}$ = 110 mA, $\mathbf{P_i}$ = 0,9 W

Cable:	$\mathbf{C_i}$ = 1 nF	$\mathbf{L_i}$ = 1 mH	(Depends on length of cable)
Fixed Range:	$\mathbf{C_i}$ = 17 nF	$\mathbf{L_i}$ = 1 mH	(Depends on length of cable)
EXTD:	$\mathbf{C_i}$ = 1 nF	$\mathbf{L_i}$ = 1 mH	

-20°C < T_{amb} < 70°C (Cable & Fixed range) and -30°C < T_{amb} < 70°C (EXTD)

The X in the certificate number refers to a special condition only applicable for our submersible level transmitter Hydrobar-Cable and -FR. See for this conditions the ATEX-certificate.

IECEx - Ex ia IIC T4 Ga
Certificate: DEK 13.0060X
$\mathbf{U_i}$ = 26,5 Vdc, $\mathbf{I_i}$ = 110 mA, $\mathbf{P_i}$ = 0,9 W

Cable:	$\mathbf{C_i}$ = 1 nF	$\mathbf{L_i}$ = 1 mH	(Depends on length of cable)
Fixed Range:	$\mathbf{C_i}$ = 17 nF	$\mathbf{L_i}$ = 1 mH	(Depends on length of cable)
EXTD:	$\mathbf{C_i}$ = 1 nF	$\mathbf{L_i}$ = 1 mH	

-20°C < T_{amb} < 70°C (Cable & Fixed range) and -30°C < T_{amb} < 70°C (EXTD)

All certifications are in compliance with IECEx scheme rules, and the International Standards : IEC 60079-0:2011, IEC 60079-11:2011, IEC 60079-26:2007 and IEC 17050-1. They are certified for use in hazardous areas by DEKRA B.V.

⚠ **DO NOT REMOVE THE SCREW COVER(S) WHEN AN EXPLOSIVE ATMOSPHERE MAY BE PRESENT.**

3.5 FUNCTIONAL SAFETY - SIL

The device is certified as **Proven in use** for a Functional safety environment of SIL2 according to IEC-61511 and SIL2 according to IEC-61508.

Note 1 : According to IEC 61511, 11.4.4 SIL3 is possible in 1oo2 configuration in conjunction with prior use experience of the instrument.

Note 2: Option SIL (Proven in use) is supplied on transmitters with a serial number > 10509426

When ordered as a SIL (Proven in use) transmitter, the safety manual will be supplied. (Option G200) Detailed information can be found in the Safety manual of the instrument. The Safety manual is available on: http://www.klay-instruments.com under section Downloads.

3.6 TRACEABILITY YEAR OF MANUFACTURING

The year of manufacturing can be traced as follows: take the first three numbers from the serial number and add 1908. For example: Serial number 10509426. The year of manufacturing is 1908 + 105 = 2013. For older transmitters, for example with serial number 9302123, the first **two** numbers must be add to 1908.

3.7 CE / EMC - RULES

All HAWK transmitters are manufactured in accordance with the RFI / EMC directives and comply with the CE standards. All transmitters are fitted with RFI filters, which provide optimum, trouble free operation. Our products are in conformity with EMC-Directive 2014/30/EU based on test results using harmonized standards.

4. MARINE APPLICATIONS

When the Hydrobar is applied in the ship building industry (for example inside ballast tanks or mud tanks) it is strongly recommended to fix the sensor part (transducer part) onto the tank wall (according to the drawing below).To do this in a proper way a separate mounting bracket is available: position 18: Drawing number: 8160, Article number 10744) (extra price). This bracket needs to be mounted on an angle steel (Position 19 yard supply) and should be mounted with 2x M8 Bolt + screw and washer. These are a part of the delivery from the bracket.

The bracket is designed in such a way that there is always a good contact between the sensor foot of the Hydrobar (Position 10) and the bracket (Position 18). When doing this there is always a good earthing from the Hydrobar to the tank wall. When the Hydrobar is mounted in this way, the signal wire does not need to be earthed. Always make sure that the instrument is not connected to earth twice to prevent the occurrence of an earth loop.

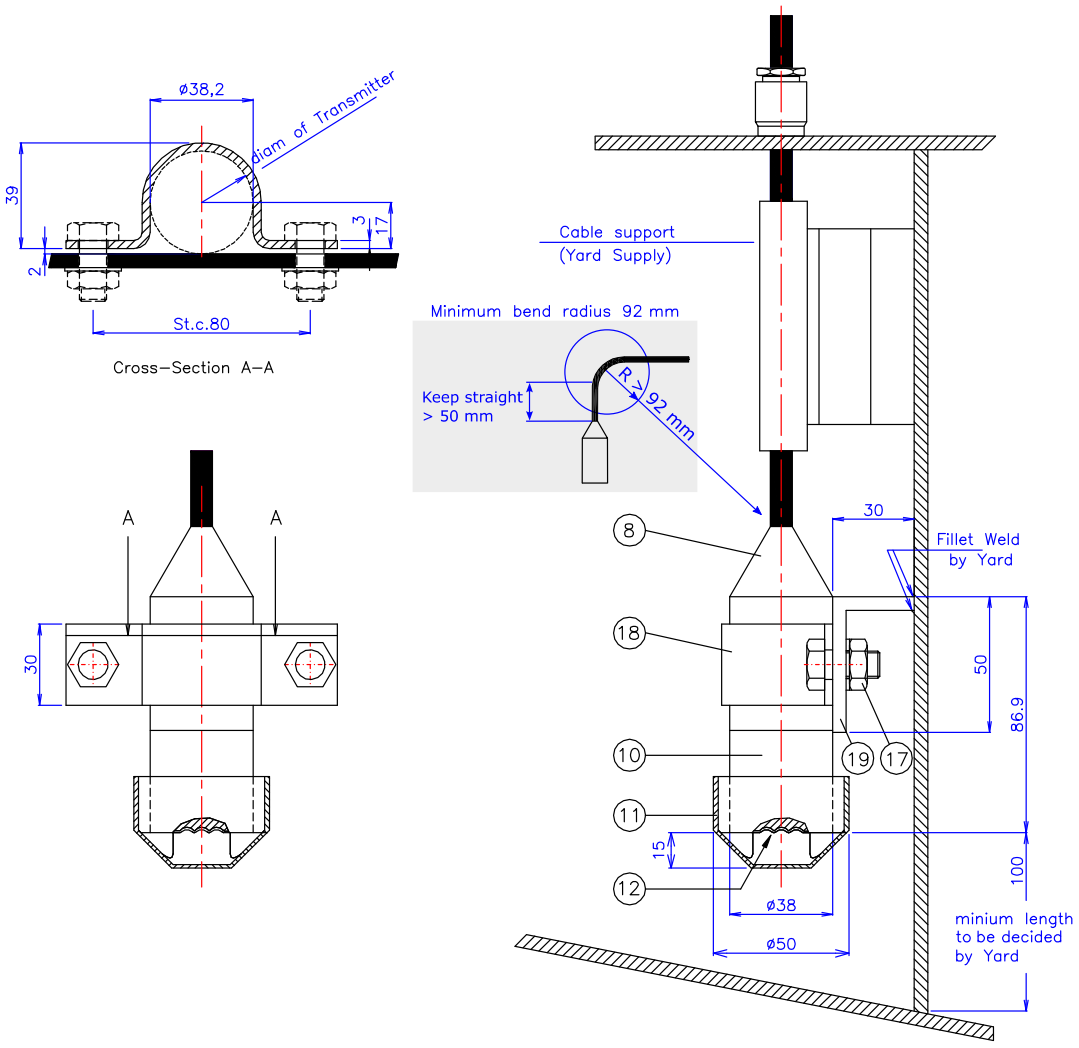

ITEM	QUANTITY	DESCRIPTION	MATERIAL
8	1	Connection to cable (IP68) bottom part	AISI 316 L
10	1	Foot with pressure sensor inside	AISI 316 L
11	1	Diaphragm protection cap	PE or POM
12	1	Diaphragm *	AISI 316 L
16	1	Cable gland (Option: Extra price or Yard supply)	
17	2	M8 bolts, screw and washers	AISI 316 L
18	1	Mounting bracket sensor foot - Part No. 10744	AISI 316 L
19	1	Angle steel (Option: Extra price or Yard supply) - Part No. 10784	AISI 316 L

* For ballast water level applications, we strongly recommend to apply a Gold plated diaphragm (Option G16, extra price).

4.1 BULKHEAD PENETRATION GLAND – SERIES 1000

For marine applications a Bulkhead Penetration gland can be delivered as an option. This gland enables cables to pass through bulkheads and decks without causing any leaks. The gland is **DNV-GL Type approved** and the Rubber Bushing is Oil and Sea water resistant. The outer sleeve, nut and washers are from AISI 316 (Other materials and dimensions on request).

Important notes before use:

- Before welding remove the Rubber Bush
- Always use **two** Washers.
- Maximum Torque of the Nut: **150 Nm**.

For more details: D/E/Bulkhead penetration gland/08-2014/01



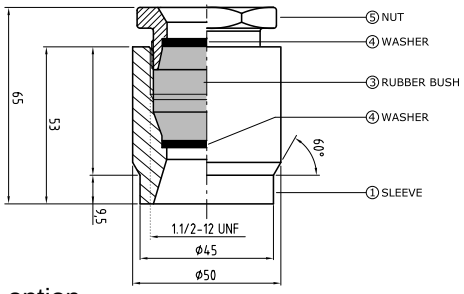

5. OPTION JUNCTION BOX G59

A special Junction Box (G59) for the Hydrobar can be delivered as an option.
The wiring is as follows: 1. Red – 2. Green – 3. White – 4. Black – 5. Brown – 6. Blue
Once the cable through the cable gland has been connected, make sure the cable gland is going to be hermetically sealed (screwed), so that no moisture can penetrate into the housing.

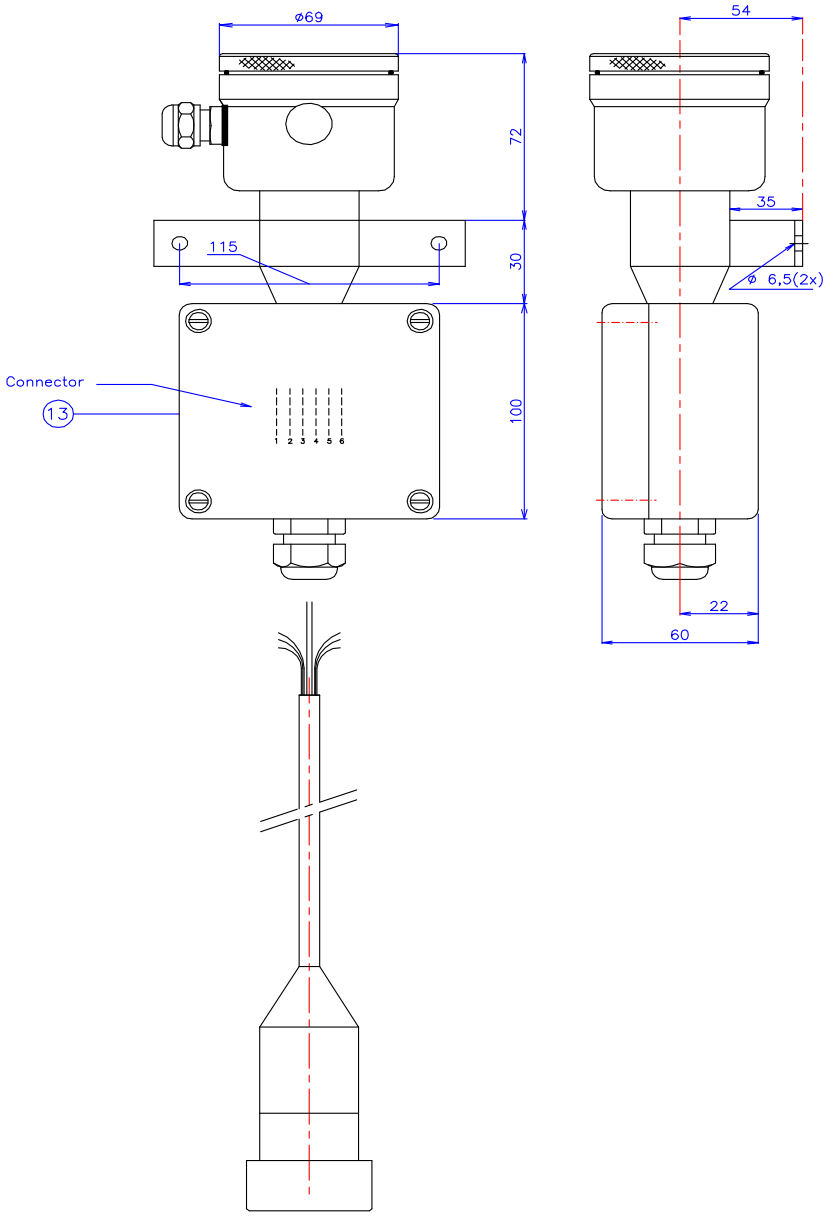

6. SPECIFICATIONS

Manufacturer	Klay Instruments B.V.
Instrument	Series Hydrobar-Cable Series Hydrobar-Cable-FR
Output	4 - 20 mA
Power Supply	**Standard**: 12 - 36 Vdc **Ex-version**: 13 - 26,5 Vdc (Hydrobar) **Ex-version**: 17 - 26,5 Vdc (Hydrobar-FR)
Accuracy	0,2% of adjusted span
Process temperature [1] Series Hydrobar-Cable Series Hydrobar-Cable-FR	 -10°C to +70°C (+14°F to 158°F) -10°C to +70°C (+14°F to 158°F)
Ambient Temperature	-20°C to +70°C (-4°F to 158°F) For Ex-version see paragraph 3.4
Protection Grade	IP 68 (For submersed parts) IP 66 (Hydrobar-Cable: Electronic housing)
Material Housing Wetted parts	AISI 304 AISI 316L

1 For higher temperatures use other kind of pressure transmitters. Contact HAWK for information

7. PRECAUTIONS AND WARNINGS

We herewith give a list of some advisements and warnings concerning the application and installation of the electronic level transmitters, the Hydrobar:

- Check if the specifications of the HYDROBAR meet the needs of the process conditions.
- To achieve the most accurate measurement with the HYDROBAR, be aware of the place where the transmitter is mounted. Here are some advises:
    - Do not mount a level transmitter in or near filling or discharging pipes.
    - In case of automatic cleaning systems or hand cleaning: never point the water jets on the diaphragm, take necessary steps to avoid this. Guarantee will not be granted.

- The diaphragm of the Hydrobar is protected with a special protection cap. Prevent damaging of the diaphragm. Guarantee will not be granted.

- As soon as the wiring is brought inside through the Cable gland and connected to the terminal board, make sure the cable gland is tightly fixed, so that moisture cannot enter into the electronic housing.

- Never unscrew the venting (3), because it is especially designed to prevent moisture from entering into the electronic housing. If the ambient conditions are very wet, we advise to use a venting through the cable. A special vented cable can be delivered on request.

- Avoid high pressure water-jets pointed at the venting.

- The cover (1) must be fully engaged, so that moisture cannot ingress into the electronic housing.
- The cover must only be capable of being released or removed with the aid of a tool.

- The warranty is 1 year after delivery. HAWK does not accept liability for consequential damage of any kind due to use or miss use of the Hydrobar Warranty will be given, to be decided by the manufacturer. Transmitters must be shipped free of charge to the factory on manufacturer's authorization.

- HAWK reserves the right to change its specifications at any time, without notice. HAWK is not an expert in the customer's process (technical field) and therefore does not warrant the suitability of its product for the application selected by the customer.

- CE Compliance All our transmitters are manufactured according to the CE-rules. All transmitters are standard equipped with RFI filters. The influence on Radio Frequency Interference between 10 MHz to 10 GHz is neglect able.

Hawk Measurement Systems
15 - 17 Maurice Court Nunawading VIC 3131, AUSTRALIA
Phone: +61 3 9873 4750 I Fax: +61 3 9873 4538
info@hawk.com.au

Hawk Measurement
5010 Gateway Drive, Medina, OH 44256, USA
Phone: +1 888 HAWKLEVEL (1-888-429-5538) /
+1 978 304 3000 / +1 877-356-5463
Fax: +1 978 304 1462 / +1 330-331-7172
info@hawkmeasurement.com

EU-DECLARATION OF CONFORMITY

Klay Instruments B.V.

Nijverheidsweg 5, 7991 CZ Dwingeloo, The Netherlands

Certify that the equipment intended for use in potentially explosive atmospheres, only new products, indicated here after:

Electronic Pressure- and Level Transmitters
Series 8000-SAN, Series 8000, Series CER-8000
Hydrobar-Cable, Hydrobar-EXTD, Hydrobar-FR

Are in accordance with:

- Directive 2014/34/EU (Equipment and protective systems intended for use in potentially explosive atmospheres)
- Directive 2014/30/EU (Electro Magnetic Compatibility).
- Harmonized standards:
  - EN 60079-0: 2012 (General rules)
  - EN 60079-11: 2012 (Intrinsic safety "i")
  - EN 60079-26:2007 (Group II cat. 1G requirements)
  - IEC 61000-6-2: 2001 (EMC, Immunity in industrial location)
  - IEC 61000-6-3: 2001 (EMC, Emission in industrial location)
  - IEC 61000-6-4: 2001 (EMC, Emission in industrial location)
  - EN-ISO-IEC 80079-34: 2011 (Potentially explosive atmospheres – Application of quality systems

- The type (protection mode "ia") which has been the subject of;
  EC-type Examination Certificate Numbers:
  KEMA 03 ATEX1219 X, Issue 5
  Delivered by the KEMA, Meander 1051, 6825 MJ Arnhem, The Netherlands, Notified Body No. 0344.

  Manufacturing plant in Dwingeloo which has been the subject of;
  Production Quality Assurance Notification Number:
  DEKRA 12ATEXQ0041, Issue 3
  Delivered by the DEKRA, Meander 1051, 6825 MJ Arnhem, The Netherlands, Notified Body No. 0344.

Date: February 12th 2018 Signature:

E. Timmer
Managing Director - Klay Instruments B.V.

The marking of the equipment is as follows: **II 1G Ex ia IIC T4 Ga**

''II''	means that the equipment has been built for use in surface industries (and not in mines endangered by firedamp).
''1''	equipment for use in Zone 0 (if G)
''G'''	equipment for use with gas, vapours or mists
''Ex''	equipment in compliance with European standards for explosive atmospheres
''ia''	equipment in compliance with specific building rules for intrinsically save equipment
''C''	equipment for use with gas of subdivision C
''T4''	equipment whose surface temperature does not exceed 135°C when used in an ambient temperature < 70°C.

Protection Grade, Series 8000-SAN, 8000, CER-8000, ***IP 66***
Protection Grade, Series Hydrobar-cable, Hydrobar-EXTD, ***IP 66***
The Hydrobar-FR and all other submersible parts from the Series Hydrobar are IP 68.
Furthermore, whatever the protection mode, only use cable glands with a protection degree of at least IP 66.
Be sure the cable diameter complies with the selected cable gland. Tighten the cable gland in a proper way.
Never forget to mount the covers of the electronics housings in a proper way.
For other technical details, refer to the instruction manuals of the series transmitters.

KLAY-INSTRUMENTS

Nijverheidsweg 5 7991 CZ Dwingeloo Tel.: +31 521 591550 The Netherlands
P.O. Box 13 7991 AA Dwingeloo Fax.: +31 521 592046 e-mail: info@klay.nl