A Higher Level of Performance

Manual

Gladiator

Conductivity Switch Series

A Level Switch for Liquids and Slurries



For more information, please visit >

www.hawkmeasure.com

Contents

Overview 3
General Description 3
Principle of Operation 3
Primary Areas of Application 3
Features 3

Typical Applications 4
Non-metallic Tank 4
Non-metallic Tank 4

Dimensions 5
Remote Amplifier 5
Optional Flange 5
Single Probe 5
Two Probe 5
Two Probe 5

Mounting 6

Dimensions 7
Mounting 7

Wiring 8
Smart Probe 8
Remote Probe to Amplifier 9
Output Functions 10
Multidrop Connections* 11
Test Terminal Function Selection 12

Setup Procedure 13
Smart Probe Functionality Layout 13
Smart Probe Version 14
Smart Probe Version 15
Remote Functionality Layout 16
Remote Version 17

Software Menu 18
Remote Amplifier 18

Flow Chart 19
Software Tree 19
Quickset 20
Advance Menu 21
Advance Menu 22
Diagnostic Displays (Remote type only) 23
Diagnostic Displays 24

Part Numbering 25
Smart Probe Version 25
Remote Version 26

Specifications 27

Conductivity Table 28

PROPRIETARY NOTICE
The information contained in this publication is derived in part from proprietary and patent data. This information has been prepared for the express purpose of assisting operating and maintenance personnel in the efficient use of the instrument described herein. Publication of this information does not convey any rights to use or reproduce it, or to use for any purpose other than in connection with the installation, operation and maintenance of the equipment described herein.

WARNING
This instrument contains electronic components that are susceptible to damage by static electricity. Proper handling procedures must be observed during the removal, installation, or handling of internal circuit boards or devices:

Handling Procedure:
1. Power to unit must be removed prior to commencement of any work.
2. Personnel must be grounded, via wrist strap or other safe, suitable means, before any printed circuit board or other internal devices are installed, removed or adjusted.
3. Printed circuit boards must be transported in a conductive bag or other conductive container. Boards must not be removed from protective container until the immediate time of installation. Removed boards must be placed immediately in a protective container for transport, storage, or return to factory.

Comments:
This instrument is not unique in its content of ESD (electrostatic discharge) sensitive components. Most modern electronic designs contain components that utilize metal oxide technology (NMOS, CMOS, etc.). Experience has proven that even small amounts of static electricity can damage or destroy these devices. Damaged components, even though they appear to function properly, exhibit early failure

General Description

The Gladiator Smart Conductivity Switch is a third generation, state-of-the-art level probe, designed to operate in tough industrial environments. The probe of the Conductivity Switch forms one part of an electric circuit, with the vessel wall or a reference probe making another part. A conductive liquid between the probe and the vessel wall (or between the probe and the reference probe) links the two parts of the circuit and the output will switch in response. The output has adjustable hysteresis and delays for 'on' or 'off' switching.

A test function is available to remotely confirm the probe integrity by switching the relay contacts.

The Gladiator Smart Switch Series includes communications capability for remote adjustment, control and monitoring.

Principle of Operation

A low voltage AC signal is applied between the probe electrode and the tank wall or reference electrode in the case of a non-metallic tank. When the liquid comes into contact with the electrode tip, a conductive path is established between the sense electrode and the metallic tank wall/reference electrode.

Current flow due to the conductive path is sensed, amplified and used to switch a relay for indication or control purposes.

Primary Areas of Application

- Brewing
- Chemical
- Dairy
- Edible Oil
- Fertilizer
- Glass
- Food & Beverage
- Mining & Metals
- Oil & Gas
- Packaging
- Paint
- Paper
- Pharmaceutical
- Power Generation
- Refining
- Semiconductor
- Sugar
- Textile
- Water & Wastewater.

Features

- No moving parts - low maintenance
- Low voltage on probe for operational safety
- Simple '1-minute' setup
- Remote sensor or Smart 'all in one' types
- Relays outputs:
  Smart probe (1), Remote (2)
- 4 / 20mA output option
- Remote test function
- Adjustable ON and OFF delays (0-20 sec)
- Modbus, GosHawk
- Remote amplifier to probe separation up to 500m (1640ft)
- Bright visual status indication on probe
- Independent housing alignment after mounting thread locked.

Non-metallic Tank

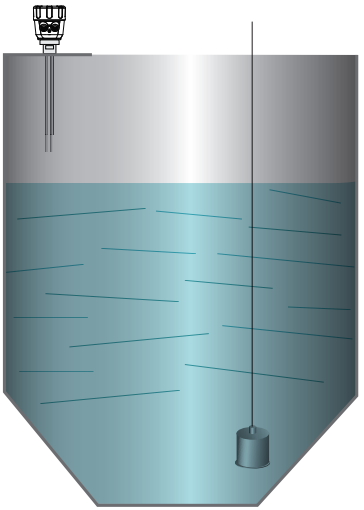

Sump pump control



Metallic Tank

Mounting must be electrically connected to tank wall for a single rod probe & mix length dual probe to work. Same length Dual probe will work without electrical connection.*

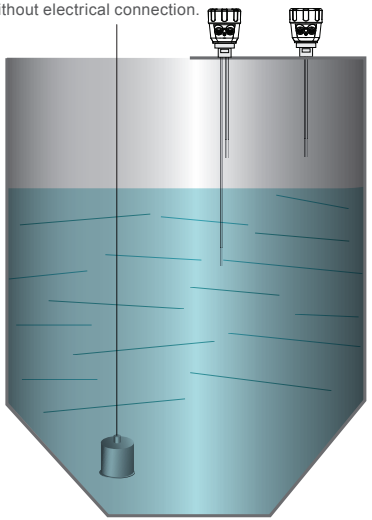

High level switch in water tank



Remote Amplifier

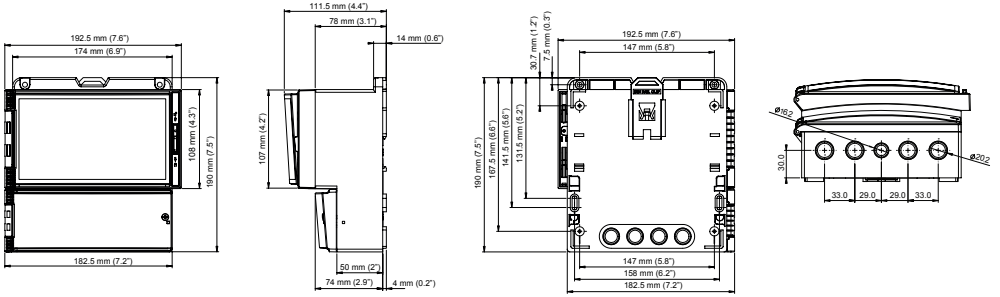

Optional Flange

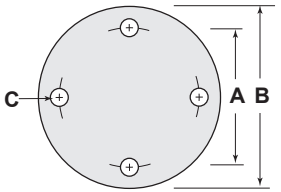

Flange Dimensions - 50mm (2")						
	A		B		C	
ANSI (Class 150)	120.7	4.75"	152.4	6"	19.1	0.75"
DIN (PN40)	125	4.9"	165	6.5"	18	0.7"
JIS (10K)	120	4.7"	155	6.1"	19	0.75"

Single Probe

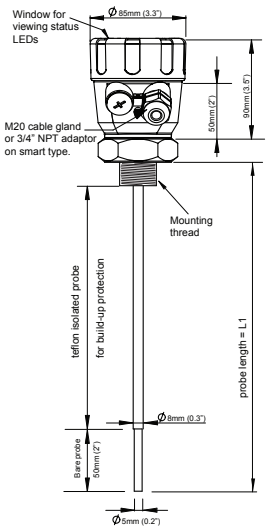

Two Probe

Single Switch Points

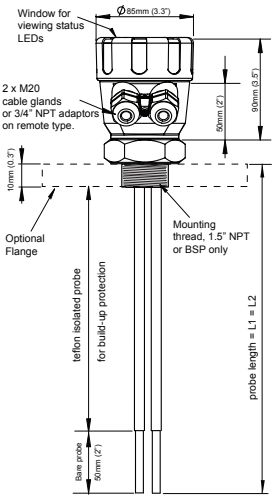

Two Probe

Dual Switch Points

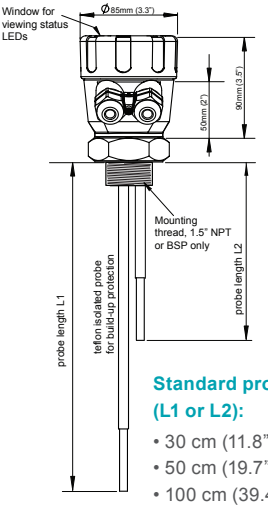

Standard probe lengths (L1 or L2):

- 30 cm (11.8")
- 50 cm (19.7")
- 100 cm (39.4")

Probes can be mounted from the top, side and bottom.

Points to consider when mounting:

A. Material Infeed Clearance

Install the probe away from the infeed to minimize the influence of build-up and impact forces, and to avoid false triggering from product flow.

B. Wall Clearance

Install the probe far enough away from the vessel wall to prevent the probe from coming into contact with the wall and prevent conductive build-up from bridging the probe to the wall over time. Avoid creating a confined area where material could build-up.

See note ①

C. Nozzle Clearance

Ensure the probe does not come in contact with the mounting nozzle.

Correct Mounting in a Nozzle

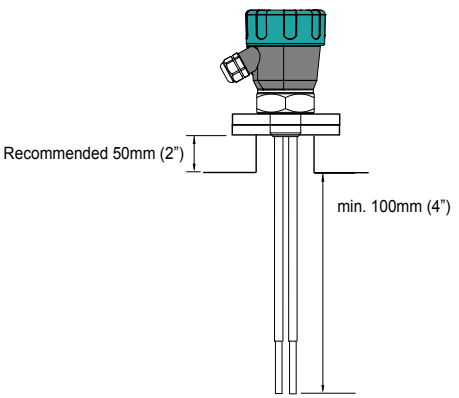

D. Top mounting

When top mounting, ensure adequate clearance is provided between probe and wall. Avoid creating a confined area where material could build-up over time.

See note ①

E. Side mounting

It is highly recommended to install any side mounted probe at a downward angle of 30-45º. Use a protection plate for side mounting where the probe may be subject to impact damage.

F. Bottom mounting

Bottom mounting is not recommended. Only mount from the bottom if no build-up of material occurs. If low level mounting is required, suitable options are shown in the diagram on next page.

INCORRECT MOUNTING NOTES:
(Refer to diagram on next page)

① Incorrect mounting because the probe is too close to the wall or roof. Positioning too close to a wall or roof may allow material build-up between the probe and the vessel.

② Incorrect mounting because the probe is touching the nozzle. The probe must not touch the nozzle or any part of the vessel. Conductive build-up must not bridge from the probe to the nozzle or reference probe.

Mounting

Probes can be mounted from above or from the side.

Use a protection plate for side mounting where the probe may be subject to impact damage.

Install the Probe far enough away from the vessel wall to prevent the probe from coming into contact with the wall, and prevent conductive build-up from bridging the probe to the wall over time.

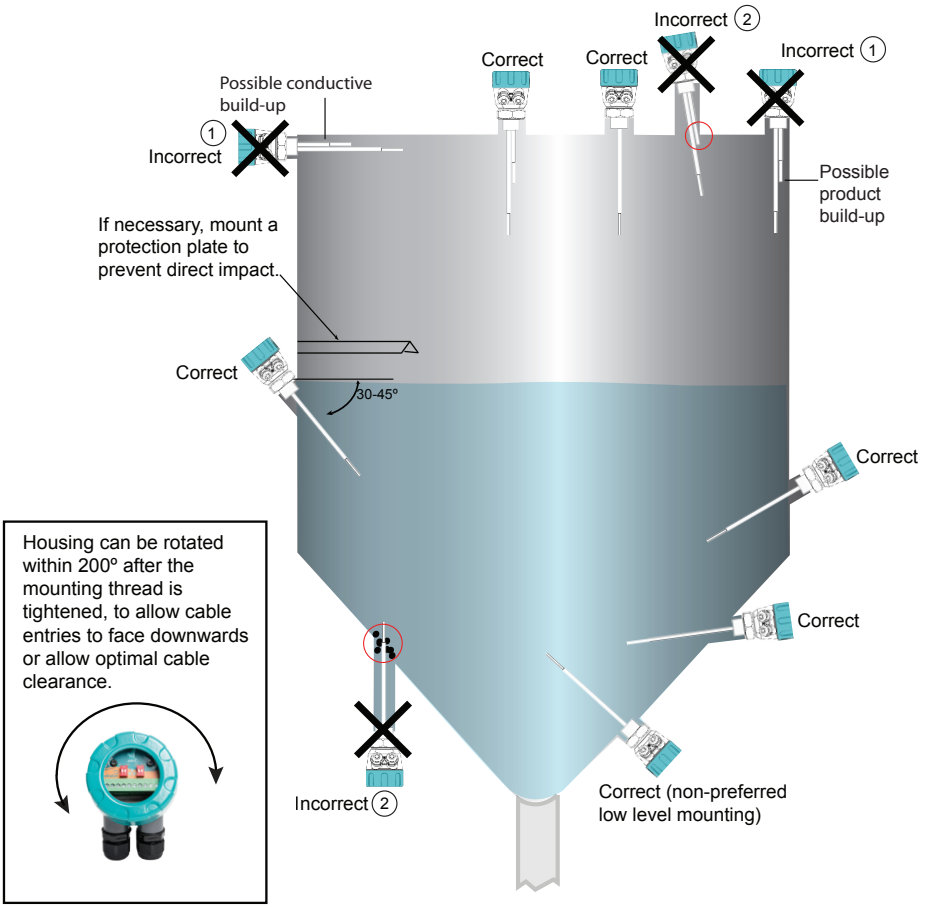

Smart Probe

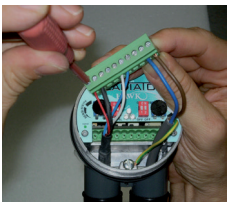

Remove Plug-In terminal block for easier wiring.

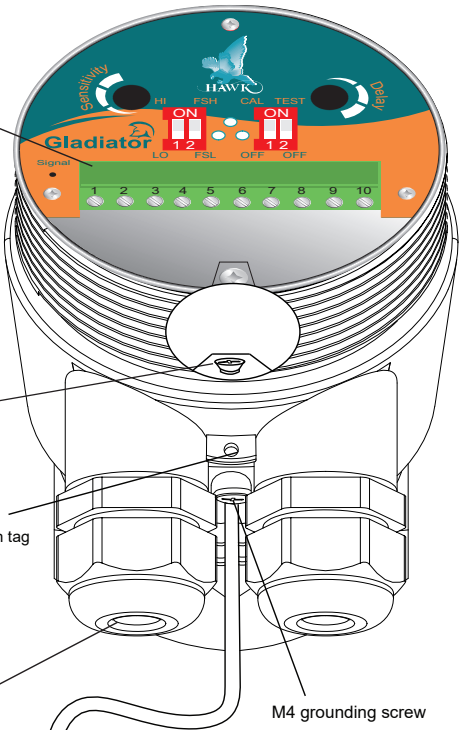

The AC earth/ground cable must be connected to the ground screw inside the housing when using AC power.

Hole for securing of optional identification tag

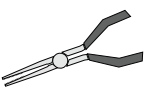

User pliers to extract terminal blocks

M4 grounding screw

If only one cable is used for both power and output signal, then the second entry port must be plugged or blinded. Every Smart unit is supplied with two M20 glands (or 3/4"NPT adaptors) mounted on the unit and one blind plug loose.

Ground the housing to vessel, if vessel is metallic. Ground the housing to plant ground, if vessel is non-metallic.

GLADIATOR SMART PROBE TERMINALS (SPDT)

RELAY				COMMS		DC-IN		AC-IN	
NC	COM	NO	Test	A	B	+	-	N	L1
1.	2.	3.	4.	5.	6.	7.	8.	9.	10.
				RS 485		12-30Vdc		80-265Vac	

GLADIATOR SMART PROBE TERMINALS (4/20mA)

				COMMS		DC-IN			
			Test	A	B	+	-		
			4.	5.	6.	7.	8.		
				RS 485		12-30Vdc			

Remote Probe to Amplifier

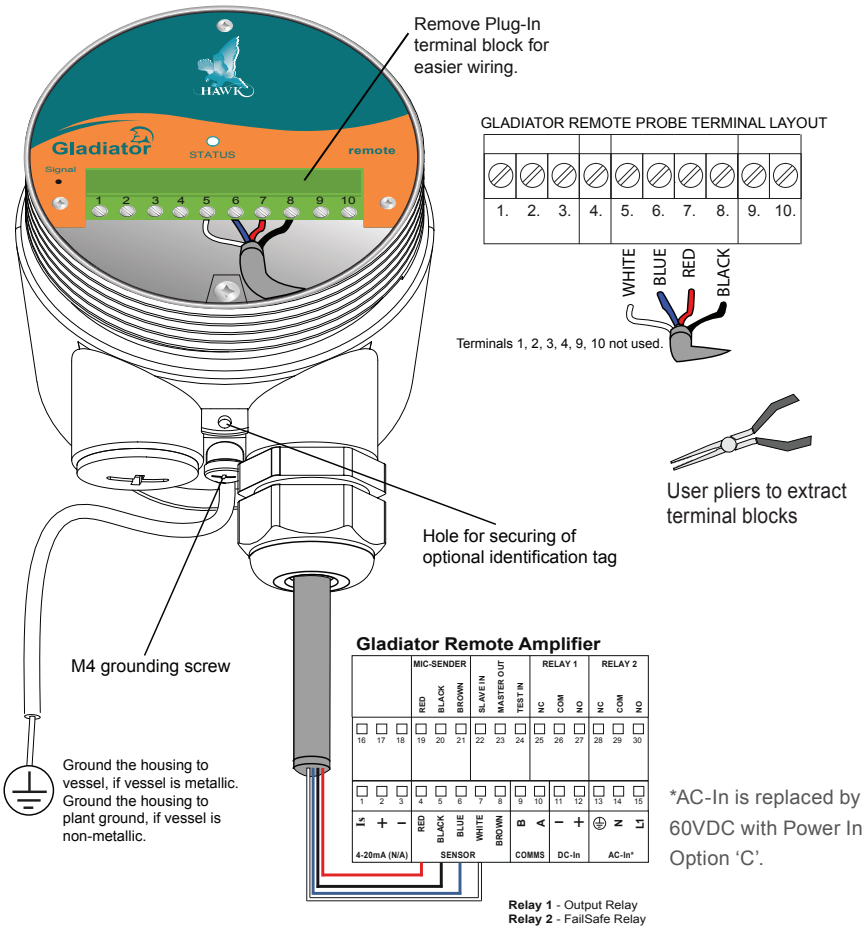

*AC-In is replaced by 36-60VDC with Power Input Option 'C'.

Cable type between Amplifier and Probe

- 4 conductor shielded twisted pair instrument cable
- Conductor size dependent on cable length
- BELDEN 3084A, DEKORON or equivalent
- Max: BELDEN 3084A = 500m (1640 ft)
- Max: DEKORON IED183AA002 = 350m (1150 ft).

Output Functions

Level Switch Contact Action

Relay - for Smart Probe Version *(Set Relay Action selection switch - pages 15 and 16)*

Relay 1 - for Remote Version *(Set Relay Action parameter pages 19 and 22)*

Analog - for Integral 4/20mA switching version

	Single Switch Point	Dual Switch Points	Relay Action: FailSafe Low FSL	Relay Action: FailSafe High FSH (default)	Analog
State 1	RISING LEVEL	OR RISING LEVEL	1 2 3 NC COM NO ○	1 2 3 NC COM NO ☼	4mA
State 2	CONTACT LEVEL	CONTACT LEVEL FALLING LEVEL	1 2 3 ☼	1 2 3 NC COM NO ○	20mA
State 1	FALLING LEVEL		1 2 3 NC COM NO ○	1 2 3 NC COM NO ☼	4mA
	POWER FAILURE		1 2 3 NC COM NO ○	1 2 3 NC COM NO ○	

FailSafe Switch Contact Action

Relay 2 - For Remote version only.

For Smart Probes the Test terminal can act as a solid state output with a similar function. *(See page 14)*

POWER FAILURE OR INTERNAL FAILURE	NC COM NO ○	NC COM NO ○
SYSTEM OPERATING NORMALLY	NC COM NO ☼	NC COM NO ☼

Multidrop Connections*

Multidrop GPRS Connection*

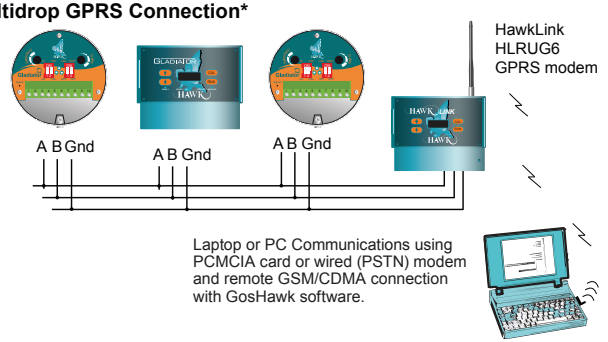

Multidrop Connection Using HawkLink USB*

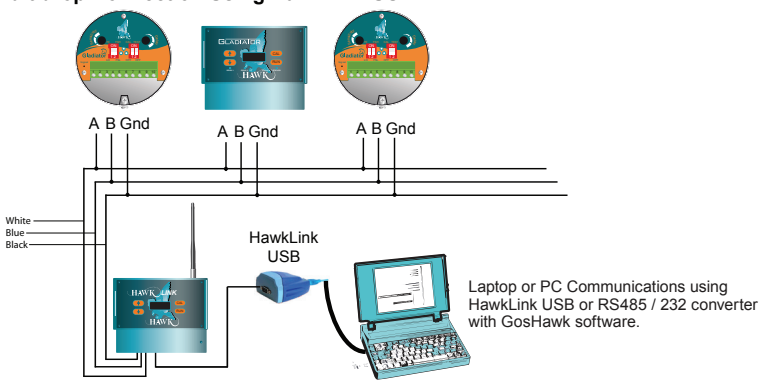

Multidrop Connection to PLC/DCS/SCADA*

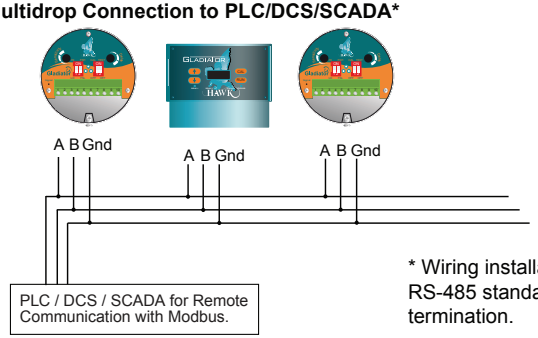

* Wiring installation should follow RS-485 standards for layout and termination.

Test Terminal Function Selection

Test input mode

Test switch must be in 'TEST' (ON) position on Smart Probe - function always enabled on Remote Amplifier. Test terminal acts as an input for remote testing of the instrument's switching function. Used to check for malfunction of unit from a remote position, PLC, SCADA etc. *For more information see page 17.*

TEST INPUT FROM PLC/SCADA/DCS DIGITAL OUTPUT

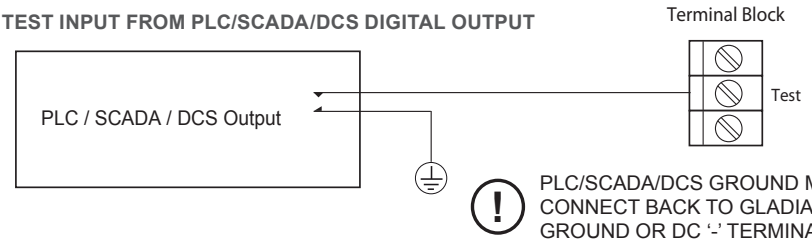

OPERATOR CONTROLLED PRESS TO TEST

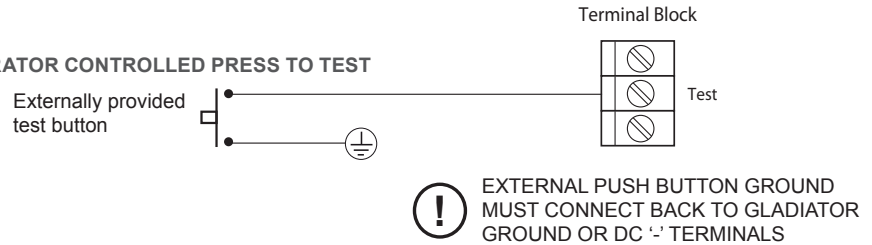

FAILSAFE OUTPUT MODE (Test switch must be in the 'OFF' position - default setting)

Test terminal will provide an output which is able to switch an external failsafe relay or PLC/SCADA/DCS input. During normal system operation this terminal will internally switch a solid state (transistor) output to ground (or DC '-'). If power fails or an internal system failure occurs, the terminal will act as an open circuit.

To switch an external relay

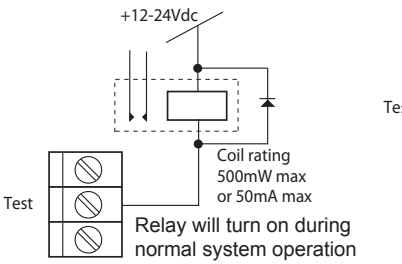

To a PLC input

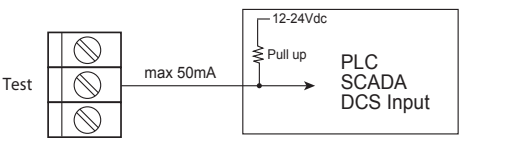

Input will detect '0' state during normal system operation, or '1' in failed or unpowered conditions.

Smart Probe Functionality Layout

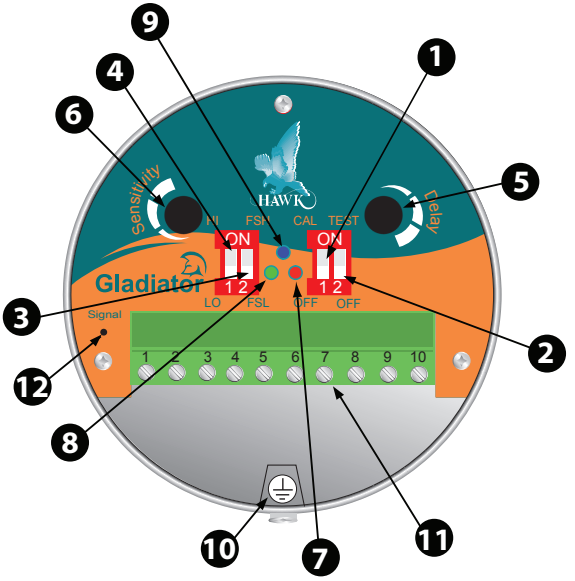

Functionality Description (bold is default)

1. Mounting Calibration switch CAL/**OFF**
2. Test input function select TEST/**OFF**
3. Relay action selection switch (SPDT only)
   FSH - FailSafe High
   FSL - FailSafe Low
4. **HI** / LO sensitivity switch
5. Delay Potentiometer (0-20 sec) (Default 0 sec. at minimum position)
6. Sensitivity Potentiometer Default **50% = 12 o'clock**
7. RED LED: Relay status
   ON when relay coil is energised
8. GREEN LED: Power / Status
   Blinks to indicate the functioning is correct and no media is detected.
   Continuously ON when media is detected.
9. BLUE LED:
   Blinking indicates calibration function is on.
   Continuously ON indicates failed calibration.
10. AC Ground - must be used for AC powered installations
11. Removable terminal block - plug in type
12. Signal voltage test point
    - Not used in Gladiator Conductivity products

Smart Probe Version

1. Mount the unit in its actual position.

(See mounting procedure - pages 6-7)

- Make sure that external ground wire is connected between the outside ground screw on the Gladiator housing and the roof/wall/side of the silo/tank/vessel/chute. (For non metallic tanks make sure that external ground wire is connected between the same outside ground screw on the housing and the general plant ground potential).

2. Check where the actual level is relative to the probe

- Make sure that the liquid is not touching the probe or probes.

3. Turn the power on

- The green LED will either stay on for 2 seconds then begin flashing or stay on permanently to indicate operation.

4. Select the required relay contact action (SPDT only)

- The Relay can switch 'ON' or 'OFF' as the product approaches the probe and switch 'ON' or 'OFF' in response to an instrument failure *(for details see page 10)*.
- Set the relay action selection switch position (FSL or FSH) depending on your requirements.

5. Cancel influence of mounting

- Do not proceed with this step unless the liquid is not touching the probe or probes.
- Switch the Mounting Calibration switch to 'CAL' (ON) position. The Blue LED will blink to indicate that mounting calibration is now in progress.
- Wait for at least 10 sec. then switch the mounting calibration switch to 'OFF' position.
- The blue LED should turn off after a short time.
- The blue LED will stay on if there was a calibration error.
- If this is the case please check that the probe is not touching the product or the mounting, then try the calibration again.
- If mounting calibration was successful the blue LED should be off and the Green LED should blink every 2 sec.
- Unit is now able to cancel influence of mounting and probe history has been cleared.

Smart Probe Version

6. Select the sensitivity

There are two adjustments controlling the sensitivity of the switch point:

6.1. The 'HI/LO' sensitivity switch is used to set your unit depending on the conductivity of the product to be measured. This switch sets the range of adjustment possible with the sensitivity potentiometer.

- If the material to be detected has a lower conductivity than 1750µS/cm (4400µS/inch) - set the switch to 'HI' (ON) - default.
- If material to be detected has a higher conductivity than 1750µS/cm (4400µS/inch) - you may set the switch to 'LO'.
- If you are not aware of your material's conductivity – set the switch to 'HI' (ON) - default.

6.2 The sensitivity potentiometer

- Set the potentiometer according to your requirements.
- A 12 o'clock setting (50%) - default, will cover the majority of instances - for the remaining instances, turning the potentiometer clockwise will increase sensitivity.
- Increasing sensitivity maybe necessary if the liquid is not detected when touching the probe.

7. Select the time delay

- Set the required delay using the Delay potentiometer. (Default is 0 sec. at minimum position) Turn the potentiometer clockwise if any delay is required.
- Maximum rotation is ¾ of a revolution.
- Max delay is 20 sec. The selected delay will be used for both an ON delay and an OFF delay.*

8. Test function (used to check for malfunction of unit from remote position, PLC, SCADA etc)

- Select the desired Test function by switching the 'Test' switch (Default = 'OFF').
- **TEST' (ON) Position:**
  - Test function is selected.
  - Test terminal (terminal number 4 of Smart probe) is used as an input to the unit.
  - The test function allows you to check the functionality of the unit.
  - Applying a ground wire to the Test terminal will change the state of the relay. It will hold this state until the ground is removed, then it will change back to the standard running mode.
  - If the unit was in a Fail mode then the relay will not change status.
- **'OFF' (Default) Position:**
  - Fail safe output function is selected.
  - Test terminal (terminal number 4 of Smart probe) will function as an open drain drive.
  - This can be used to drive a relay or an active low PLC input to detect a Fail condition.
  - In normal operation mode the Test terminal will output Zero Volts (Short to GND).
  - In Fail or unpowered mode the Test terminal will be open circuit.

See page 14 for further information.

**Setting of different time ranges for the delay potentiometer for ON delay and OFF delay is possible using a PC connected via GosHawk2 software. By default, both will have the same time adjustment range (20 sec max) and adjustment will result in equal ON delay and OFF delay.*

Remote Functionality Layout

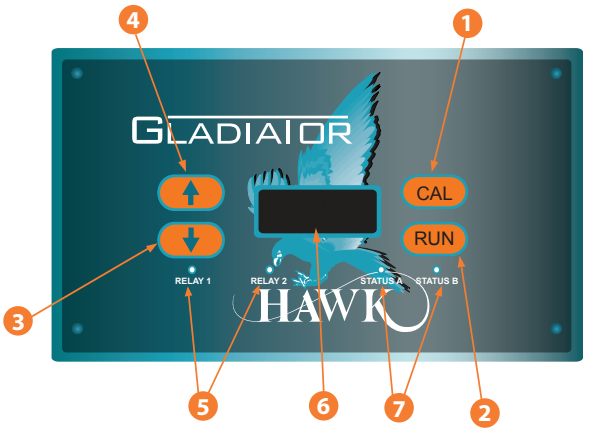

1. Calibrate button
2. Run button
3. Down button
4. Up button
5. Relay status LEDs 1 and 2
6. Display (LCD with backlight)
7. Status LEDs A and B
   - Status A flashes with probe to amplifier communications
   - Status B has no function in this product

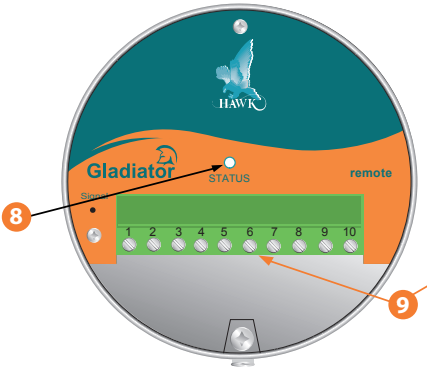

REMOVABLE REMOTE PROBE TERMINAL BLOCK

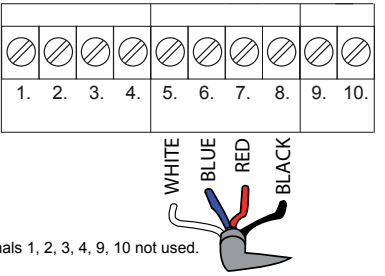

Terminals 1, 2, 3, 4, 9, 10 not used.

8. GREEN LED: Power / Status
   Blinks every 1/2 second to indicate that functioning is correct and no medium is detected.
   LED on continuously indicates correct functioning and media is detected.

9. Removable terminal block - plug in type

Remote Version

1. Mount the unit in its actual position.

(See mounting procedure - page 6-7)

- Make sure that external ground wire is connected between the outside ground screw on the Gladiator housing and the roof/wall/side of the silo/tank/vessel/chute (for non metallic tanks make sure that external ground wire is connected between the same outside ground screw on the housing and the general plant ground potential.).

2. Check where the actual level is relative to the probe.

- Make sure that product is not touching the probe - ideally it needs to be > 500mm away (if the silo/vessel/tank/chute is very small you must ensure that the material is as far away as possible - it must not be touching the probe).

3. Turn the power on

- The display will turn on and the failsafe relay will switch.
- The display will scroll through the following messages: Hawk, Amp SerialNo, Type, Amp Soft Ver, Device ID, SensorSerial, SensorModel, Sens SoftVer, Sensor Addrs, Gladiator System Amp.
- The unit will then go into operational mode displaying 'Switch' with a % value. This % value represents the changing admittance reading.

4. Simple "1-minute" Setup - Follow the flow chart

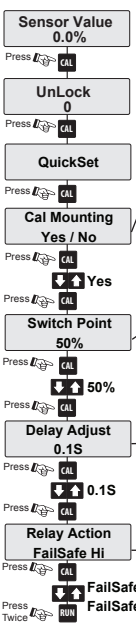

Cancel Influence of Mounting

Do not proceed with this step unless the product is not touching the probe or probes.

Select 'Yes' to start the mounting calibration. 'Wait' will be displayed during the calibration for up to 30 seconds.

Unit is now able to cancel the influence of the mounting. The % reading has been zeroed with the existing process conditions and probe history log has been cleared.

Select the Switch point (sensitivity)

The output relay will switch at the entered % value. The default value of 50% will be suitable for detecting most media. For detection of products having low conductivity, select a lower % value and vice versa. A higher % value will require a more conductive product. When the level falls the relay will switch back at half of the entered switch point % value (when the liquid no longer touches the probe).

Select the Time Delay

Set the time to be used for both switch on and switch off delays (default: 0.1 seconds). Maximum Delay is 40 seconds.

Select the required relay action

The Relay can switch 'ON' or 'OFF' as the product approaches the probe and switch 'ON' or 'OFF' in response to an instrument failure. *For details see page 10*. Set the parameter to FailSafe Low or FailSafe Hi depending on your requirements.

Remote Amplifier

Entering Data

All software adjustments are achieved via the four PUSHBUTTONS on the front panel.



In Run Mode

(A) Press and hold - interrupts normal operations and allows access to software menu headings.

In Calibrate Mode

(B) Steps into a menu selection to allow editing (down one level)

(C) Saves selected value and moves onto the next menu item.



In Run Mode

(A) Scrolls up through operating diagnostics on display LCD.

In Calibrate Mode

(B) Scrolls up through software parameters when browsing the menus.

(C) Increases display value when editing a parameter.



In Run Mode

(A) Scrolls down through operating diagnostics on LCD display.

In Calibrate Mode

(B) Scrolls down through software parameters when browsing the menus.

(C) Decreases display value when editing a parameter.



In Run Mode

(A) Hides diagnostics if they are in view and returns to the standard running display.

In Calibrate Mode

(B) Steps out of a menu or selection (up one level). Parameter value will be stored automatically when stepping up.

(C) Returns to running mode from the top level menu.

Software Tree

Software version 7.14

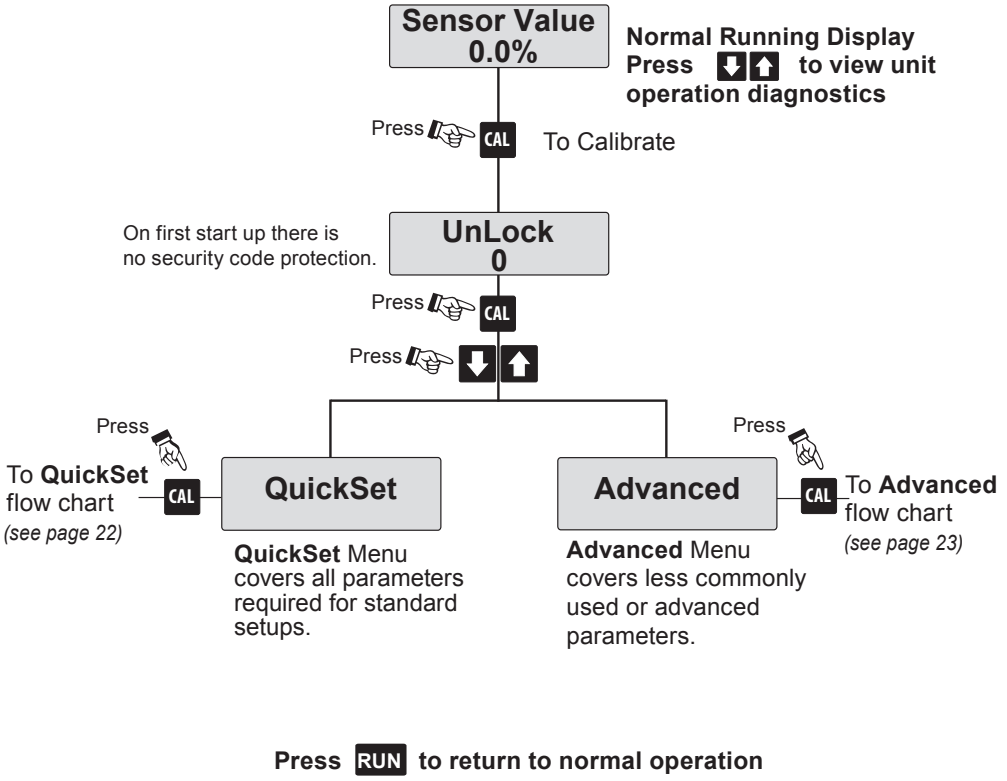

Press RUN to return to normal operation

Quickset

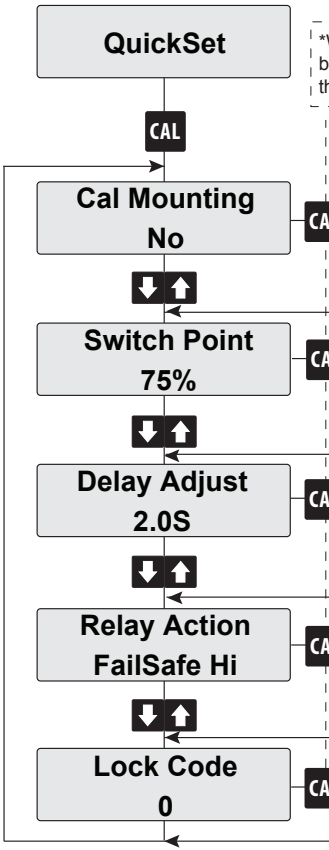

*When CAL is pressed '↑↓ edit' will flash on the bottom line of the display for a short time to indicate that the parameter is being opened for editing.

Calibrate mount will cancel the mounting influence and zero the % reading with the existing process conditions. Probe history log will be cleared. Vessel must be empty before calibration. Yes / No

Relay 1 will switch at the entered Switch Point value and switch back at half of this value. **Manual** will be displayed if you have set the parameter 'Switch Mode' to Manual in Advanced menu. The Manual setting can only be removed or adjusted from the Advanced menu.

Set switch delay time 0.1-72.8sec

Relay Action (**FailSafe Hi** or FailSafe Low)
(see page 10)

Security code lock
Adjustable 0-200
Default **0**

Default values/settings in bold and underlined

Advance Menu

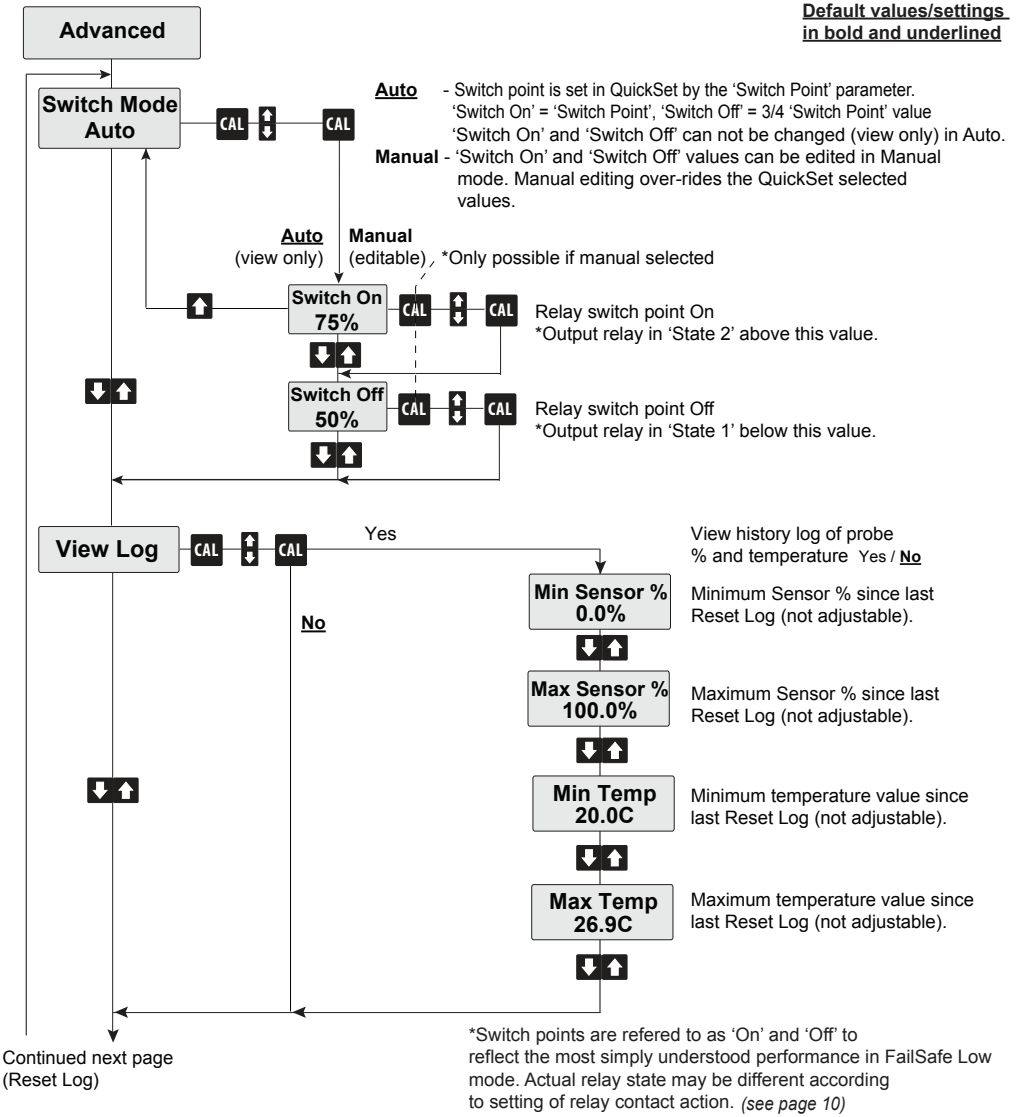

Advance Menu

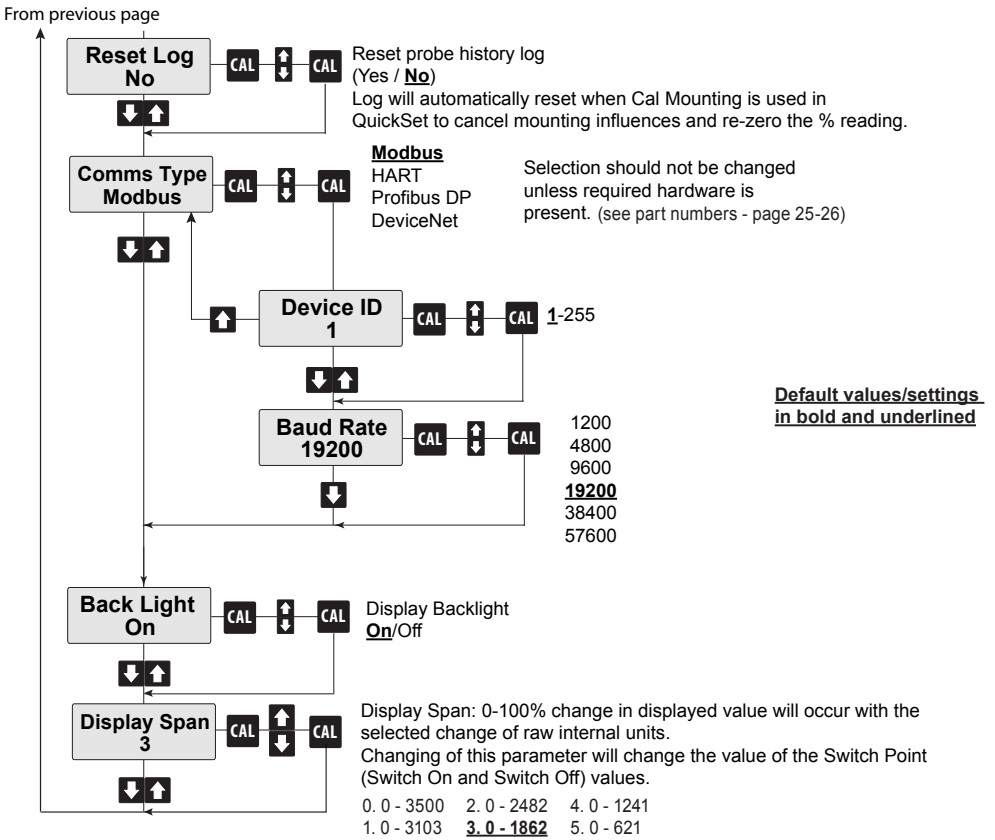

Diagnostic Displays (Remote type only)

The diagnostic displays appear on the top line of the LCD, after pressing the Up or Down push button when the Gladiator switch is in its normal running mode.
The diagnostics provide the user with valuable performance feedback on how the instrument is performing whilst in operation.
The measured reading Sensor Value (%) continues to be displayed on the second line of the LCD during diagnostic viewing on the top line. Ouput relays will continue to operate during diagnostic viewing.

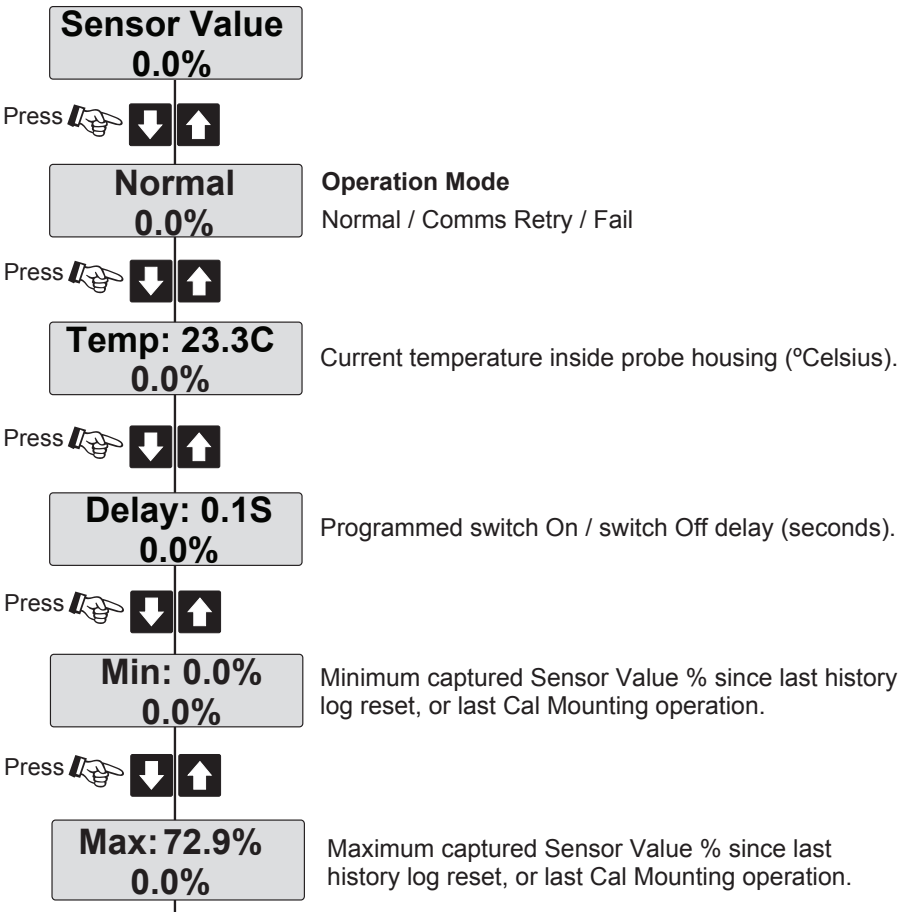

Diagnostic Displays

Continuous from previous page...

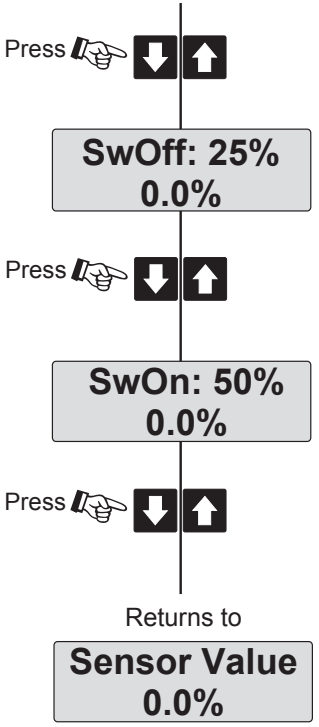

Percentage below which the Relay will be in State 1*.

Percentage above which the Relay will be in State 2*.

*Switch points are refered to as ‘On’ and ‘Off’ to reflect the most simply understood performance in FailSafe Low mode. Actual relay state may be different according to setting of relay contact action.

Smart Probe Version

CS3100 Gladiator Conductivity Switch - Smart Probe, Modbus

Power Supply
- B 12-30VDC
- U 12-30VDC and 90-260VAC

Output Options
- S 1 x SPDT Relay
- Y 4 / 20mA switching

Housing
- S Standard Powder Coated, Diecast with glass lid
- C Corrosion Resistant, Stainless Steel Housing

Type of Electrodes
- S Single Point 1 Electrode Type for Metallic tanks
- D Dual Point 2 Electrode Type for Metallic tanks
- N Single Point 2 Electrode Type for Non-Metallic tanks (L1 must = L2)

Mounting
- TN10 1" NPT Thread - Size only available for 1 electrode type
- TB10 1" BSP Thread - Size only available for 1 electrode type
- TN15 1.5" NPT Thread
- TB15 1.5" BSP Thread
- FA2 2" Flange ANSI (Class 150)
- FD2 2" Flange DIN 50 (PN 40)

Approval Standard
- X Not Required
- A22 ATEX Grp II Cat 3 GD T85°C IP67 Tamb -40°C to 70°C

L1 Probe Length (Active Probe)
- P30 300 mm (11.8")
- P50 500 mm (19.7")
- P100 1000 mm (39.4")

L2. Probe Length (Reference Probe - equal to or longer than L1)
- X Not required for 1 electrode type
- P30 300 mm (11.8")
- P50 500 mm (19.7")
- P100 1000 mm (39.4")

Non-standard probe lengths available. Contact Factory.

CS3100 B S S S TN10 X P30 X	**Single Point Switch - Metallic Tank**
CS3100 B S S D TN15 X P30 P50	**Dual Point Switch - Metallic Tank**
CS3100 B S S N TN15 X P30 P30	**Single Point Switch - Non-Metallic Tank**

Remote Version

Remote Amplifier

GSA Gladiator Amplifier (compatible with all Gladiator products), Modbus

Housing
S Standard polycarbonate electronics housing

Power Supply
B 12-30 VDC
C 36-60VDC
U 12-30VDC and 90-260VAC

Output Options
S Switch. 1 level relay, 1 failsafe relay

Approval
A22 Grp II Cat 3 GD T85°C IP67 Tamb -40°C to 70°C

GSA	S	U	S

Remote Probe

CS3200 Remote Gladiator Conductivity Probe

Housing
S Standard Powder Coated, Diecast with glass lid
C corrosion Resistant, Stainless Steel Housing

Type of Electrodes
S Single Point 1 Electrode Type for Metallic tanks
D Dual Point 2 Electrode Type for Metallic tanks
N Single Point 2 Electrode Type for Non-Metallic tanks (L1 must = L2)

Mounting
TN10 1" NPT Thread - Size only available with 1 electrode type for metallic tanks
TB10 1" BSP Thread - Size only available with 1 electrode type for metallic tanks
TN15 1.5" NPT Thread
TB15 1.5" BSP Thread
FA2 2" Flange ANSI (Class 150)
FD2 2" Flange DIN 50 (PN 40)

Approval Standard
X Not Required
A22 ATEX Grp II Cat 3 GD T85°C IP67 Tamb -40°C to 70°C

L1. Probe Length (Active Probe)
P30 300 mm (11.8")
P50 500 mm (19.7")
P100 1000 mm (39.4")

L2. Probe Length (Reference Probe - equal to or longer than L1)
X Not required for 1 electrode type
P30 300 mm (11.8")
P50 500 mm (19.7")
P100 1000 mm (39.4")

Non-standard probe lengths available. Contact Factory.

CS3200	S	S	TN10	X	P30	X	Single Point Switch - Metallic Tank
CS3200	S	D	TN15	X	P30	P50	Dual Point Switch - Metallic Tank
CS3200	S	N	TN15	X	P30	P30	Single Point Switch - Non-Metallic Tank

Operating Voltage

- 12 - 30Vdc (residual ripple no greater than 100mV)
- 80 - 260Vac 50/60Hz
- 36 - 60Vdc

Power Consumption

- <0.8W @ 24VDC
- <6W @ 48VDC
- <5VA @ 240VAC
- <3VA @ 115VAC

Communications

- GosHawk, Modbus
- Remote version also with HART, Profibus DP and DeviceNet (options)
- Multidrop mode can address 1-250 units over 4 wires

Relay Output: (1) SMART (2) Remote

- Form 'C' (SPDT) contacts, rated 5A at 240Vac resistive
- Remote failsafe test facility for one relay.

Analog Output

- 4 / 20mA switching

Measurement Range

- 100 Ohms - 10 M-Ohms
- 10000 Micro-Siemens - 1 Micro-Siemen

Stability

- 0.01% Conductivity / °C

Operating Temperature

- Remote electronics -40°C (-40°F) to 80°C (176°F)
- Smart Probe -40°C (-40°F) to 80°C (176°F)
- Remote Probe -40°C (-40°F) to 80°C (176°F)

Probe/Amplifier Separation

- Up to 500m (1640ft) using specified extension cable

Cable type between Amplifier and Probe

- 4 conductor shielded twisted pair instrument cable.
  - Conductor size dependent on cable length.
  - BELDEN 3084A, DEKORON or equivalent.
  - Max: BELDEN 3084A = 500m (1640 ft)
  - Max: DEKORON IED183AA002 = 350m (1150 ft)

Maximum Operating Pressure

- 2 BAR

Display (Remote version only)

- 2 line x 12 character alphanumeric LCD
- Backlight standard

Memory - Remote

- Non-Volatile (No backup battery required)
- >10 years data retention

Enclosure Sealing

- Smart Probe IP67
- Remote Electronics IP65 (NEMA 4x)
- Remote Probe IP67

Cable Entries

BSP process mounting:
- 2 x M20 Glands

NPT process mounting:
- 2 x 3/4" NPT threaded adaptors

Remote:
- 3 x 20mm (0.8"), 1 x 16mm (0.6") knock outs.

Mounting

- 1" NPT or BSP Thread
- 1.5" NPT or BSP Thread
- 50mm (2") Flange (ANSI, DIN or JIS patterns available)

Remote Test Input

- Press to test (used to check for malfunction of unit from remote position, PLC, SCADA etc)

Conductivity Table

Gladiator Conductivity Switch Series

Material	Temperature (°C)	(°F)	Conductivity (µS/cm)	(µS/in)
Acetamide	100	212	43	109
Acetic Acid	18	64.4	318	800
Alum	25	77	9000	22900
Ammonia	15	59	251	600
Ammonium Chloride	18	64.4	91800	233200
Ammonium Iodide	18	64.4	77200	196100
Ammonium Nitrate	15	59	59000	149900
Ammonium Sulfate	15	59	55200	140200
Asphalt Emulsion	30	86	9000	22900
Barium Chloride	18	64.4	38900	98800
Barium Hydroxide	18	64.4	25000	63500
Barium Nitrate	18	64.4	20900	53100
Black Liquor	93	199.4	5000	12700
Butyric Acid	18	64.4	455	1200
Cadium Bromide	18	64.4	231	600
Cadium Chloride	18	64.4	495	1300
Cadium Iodide	18	64.4	2120	5400
Cadium Nitrate	18	64.4	6940	17600
Cadium Sulfate	18	64.4	247	600
Calcium Chloride	18	64.4	64300	163300
Calcium Nitrate	18	64.6	49100	124700
Coca Cola Syrup	20	68	600	1500
Coffee Extract	84	183.2	5000	12700
Cream Cheese Mix	79	174.2	5000	12700
Cupric Chloride	18	64.4	18700	47500
Cupric Nitrate	15	59	36500	92700
Cupric Sulfate	18	64.4	10900	27700
Formalehyde	38	100.4	175	400
Formic Acid	18	64.4	5500	14000
Fudge	57	134.6	46	117
Gallium	30	86	$4x10^{9}$	$9x10^{10}$
Germanium Tetrabro.	30	86	78	198
Hydriodic Acid	15	59	133000	337800
Hydrobromic Acid	15	59	191000	485100
Hydrochloric Acid	15	59	395000	1003300
Hydrofluoric Acid	18	64.4	250	600
Latex	25	77	1750	4400
Latex Paint	25	77	700	1800
Lead Nitrate	15	59	19100	48500
Lithium Carbonate	18	64.4	3430	8700
Lithium Chloride	18	64.4	41000	104100
Lithium Hrydoxide	18	64.4	78100	198400
Lithium Iodide	18	64.4	29600	75200
Lithium Sulfate	15	59	40000	101600
Maganese Chloride	15	59	52600	133600

Material	Temperature (°C)	(°F)	Conductivity (µS/cm)	(µS/in)
Magnesium Chloride	18	64.4	68300	173500
Magnesium Nitrare	18	64.4	43800	111300
Magnesium Sulfate	15	59	26300	66800
Mercury	0	32	$2x10^{10}$	$4x10^{10}$
Molasses	10	50	300	800
Nitric Acid	18	64.4	312000	792500
Oleum	25	77	500	1300
Oxalia Acid	18	64.4	50800	129000
Oxygen			78300	198900
Phosphoric Acid	15	59	56600	143800
Polystryrene	54	129.2	1200	3000
Potassium Acetate	15	59	34700	88100
Potassium Bromide	15	59	46500	118100
Potassium Carbonate	10	50	56100	142500
Potassium Chloride	19	66.4	69000	175300
Potassium Cyanide	15	59	52700	133900
Potassium Floride	18	64.4	65200	165600
Potassium Hydroxide	15	59	146000	370800
Potassium Iodide	18	64.4	33800	85900
Potassium Oxalate	18	64.4	48800	124000
Potassium Sulfate	18	64.4	45800	116300
Propionic Acid	18	64.4	479	1200
RC cola syrup	25	77	600	1500
Silver Nitrate	18	64.4	25600	65000
Sodium Acetate	18	64.4	29500	74900
Sodium Carbonate	18	64.6	45100	114600
Sodium Chloride	18	64.4	67200	170700
Sodium Hydroxide	18	64.4	46500	118100
Sodium Iodide	18	64.4	29800	75700
Sodium Nitrate	18	64.4	43600	110700
Sodium Sulfate	18	64.4	40900	103900
Sodium Sulfide	18	64.4	61200	155400
Starch	27	80.6	3000	7600
Strontium Chloride	18	64.4	48300	122700
Strontium Nitrate	15	59	30900	78500
Sugar Solution Dilute	30	86	585	1500
Sulfuric Acid	18	64.6	209000	530900
Titanium Dioxide	25	77	4000	10200
Toothpaste	25	77	150	400
Uranium Sulfate Ext.	38	100.4	3000	7600
Urea	25	77	5000	12700
Water	25	77	72	183
Zinc Chloride	15	59	27600	70100
Zinc Oxide	25	77	2000	5100
Zinc Sulfate	18	64.4	19100	48500

Hawk Measurement Systems
(Head Office)
15 - 17 Maurice Court
Nunawading VIC 3131, AUSTRALIA
Phone: +61 3 9873 4750
Fax: +61 3 9873 4538
info@hawk.com.au

Hawk Measurement
90 Glenn Street
Suite 100B, Lawrence, MA 01843, USA
Phone: +1 888 HAWKLEVEL (1-888-429-5538)
Phone: +1 978 304 3000
Fax: +1 978 304 1462
info@hawkmeasure.com

For more information and global representatives: **www.hawkmeasure.com**

All company or product names are registered trademarks or trademarks of their respective owners.

DOC-CONDUCTIVITY-MAN Rev. 1.3
0616