A Higher Level of Performance

Manual

Gladiator

Admittance Smart Switch Series

An All-round Point Level Switch



For more information, please visit >

www.hawkmeasurement.com

Contents

Overview 3
Principle of Operation 3
Typical Uses 3
Primary Areas of Application 3
Features 3
Function 3

Typical Applications 4
Cyclone Bin Level Switch 4
Presence / Absence of Liquid In Pipe Detection 4
High and Low-level Switch In A Hopper 5

Dimensions 6
Remote Amplifier 6
Remote Probe 7
Integral Probe 7
Flexible Cable Probe 8
High Temperature Probe (<250°C, <482°F) 9
High Temperature Extensions (<250°C, 482°F) 9
High Temperature Probe (450°C, 842°F) 9
D168 Probe version (Flanged Mount) 10
Pump Protection Version 10
Sealing Cover 10
D33 Probe version (1" Mount) 10

Mounting 11

Mounting Examples 12

Flexible Cable Probe Adjustment 13
Notes For Adjusting Probe Rope Length 13

Wiring 14
Integral Probe 14
Remote Probe to Amplifier 15
Relay Functions 16
Multidrop Connections 17
Test Terminal Function Selection (SPDT Only) 18

Setup Procedure 19
Integral Probe Functionality Layout 19
Integral Probe Version 20
Remote Functionality Layout 22
Remote Version 23

Main Menu & Interface 24
Remote Main Menus & Interface - Remote System 24

Software Parameters 25
Operational Diagnostics (Remote Type Only) 25
Quickset Menu - Parameters 26
Advanced Menu - Parameters 27

Software Flow Chart 28

Troubleshooting 32
Remote Version 32

Part Numbering 33
Integral Probe Version 33
Remote Version 34
Mounting Flanges 34
Pump Protection Version 36
Flush Mount Version 36

Approvals / Probe Configurations 37

Specifications 38

Dielectric Constants Table 39

PROPRIETARY NOTICE
The information contained in this publication is derived in part from proprietary and patent data. This information has been prepared for the express purpose of assisting operating and maintenance personnel in the efficient use of the instrument described herein. Publication of this information does not convey any rights to use or reproduce it, or to use for any purpose other than in connection with the installation, operation and maintenance of the equipment described herein.

WARNING
This instrument contains electronic components that are susceptible to damage by static electricity. Proper handling procedures must be observed during the removal, installation, or handling of internal circuit boards or devices:

Handling Procedure:
1. Power to unit must be removed prior to commencement of any work.
2. Personnel must be grounded, via wrist strap or other safe, suitable means, before any printed circuit board or other internal devices are installed, removed or adjusted.
3. Printed circuit boards must be transported in a conductive bag or other conductive container. Boards must not be removed from protective container until the immediate time of installation. Removed boards must be placed immediately in a protective container for transport, storage, or return to factory.

Comments:
This instrument is not unique in its content of ESD (electrostatic discharge) sensitive components. Most modern electronic designs contain components that utilize metal oxide technology (NMOS, CMOS, etc.). Experience has proven that even small amounts of static electricity can damage or destroy these devices. Damaged components, even though they appear to function properly, exhibit early failure

Principle of Operation

The probe of the Admittance Switch forms one plate of a capacitance circuit, with the vessel wall making the second plate. The dielectric constant of the product between the probe and the vessel wall will cause a change of capacitance as the level approaches the probe. The change is detected, amplified and used to switch a relay for indication or control purposes. A special circuit is used to ignore product build-up between the sensing probe (active element) and guard, and also between the guard and vessel wall.

Typical Uses

- Failsafe high-level / low-level alarm
- High-level alarm
- Low-level alarm
- Blocked chute / Plugged chute
- Interface detection
- Pump control.

Primary Areas of Application

- Asphalt
- Brewing
- Cement
- Chemical
- Dairy
- Edible oil
- Fertilizer
- Food & Beverage
- Glass
- Mining & Metals
- Oil & Gas
- Packaging
- Paint
- Paper
- Pharmaceutical
- Plastics
- Power Generation
- Refining
- Semiconductor
- Sugar
- Textile
- Water & Wastewater.

Function

The Gladiator Admittance Smart Switch is point level switch for liquids, solids and powders.

The unit is suitable for a broad range of products and dielectric constants up to high temperature of 450°C (842°F).

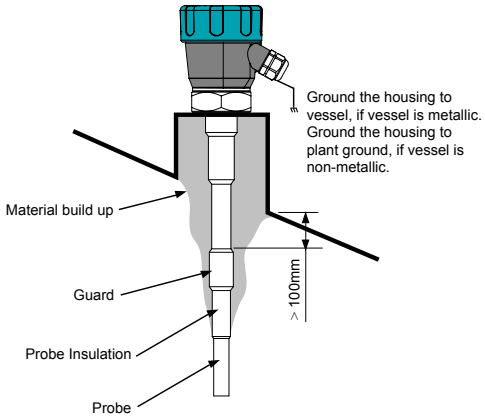

Features

- Excellent immunity to product build-up
- Excellent temperature stability - no false trips
- Non contact switching possible with many products
- Simple '1-minute' setup
- Remote sensor or Integral 'all in one' types
- Relay outputs: Integral probe (1) Remote (2)
- Remote test function
- Adjustable ON and OFF delays (0-20 sec)
- Remote 3G Connection option
- Remote amplifier to probe separation up to 500m (1640ft)
- Bright visual status indication on Probe
- Independent housing alignment after mounting thread locked.

Cyclone Bin Level Switch

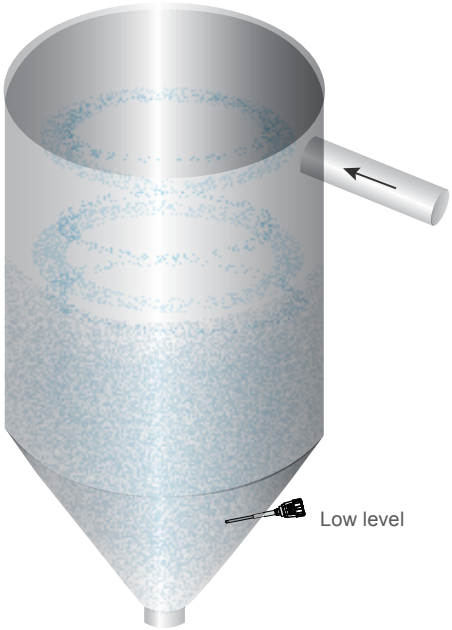

High level switch in grain application



High level switch in plastic pellet silo

Presence / Absence of Liquid In Pipe Detection

Sealing plug available allowing removal of unit without pipe leakage

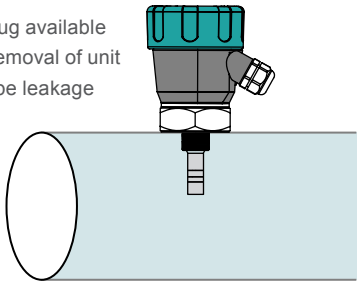



High and Low-level Switch In A Hopper

High level (top mounted)

Low level (top mounted)

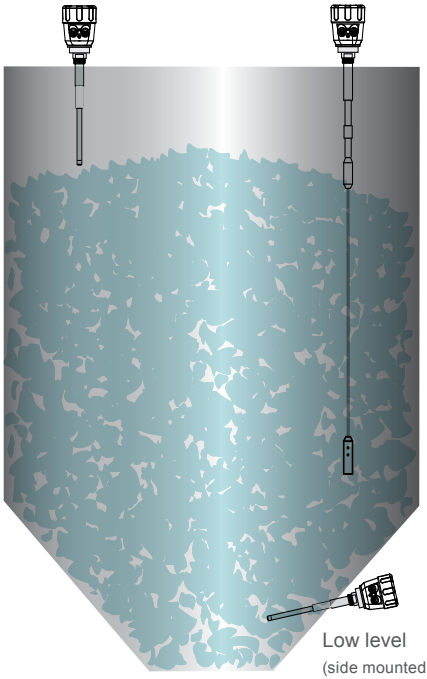

Low level
(side mounted)

Continuous filling with build-up on probe



If impact from falling material is expected, mount a protection plate above the probe to ensure no physical damage can occur to the probe in normal operation. If it is not possible to do this or to move the probe to an alternative position, use a microwave switch.

See www.hawkmeasurement.com for further information on Microwave switches and other level products.

Remote Amplifier

Front

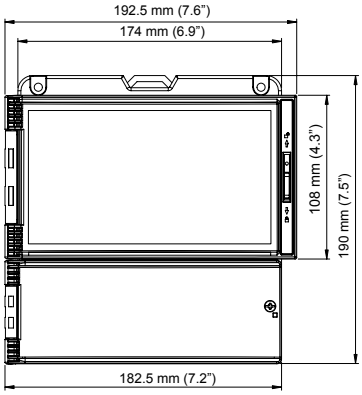

Side

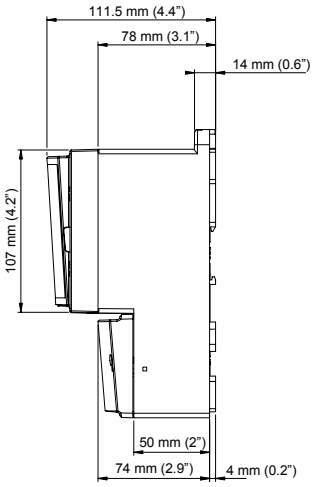

Back

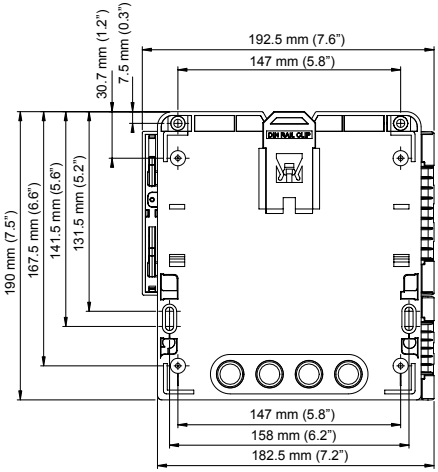

Base

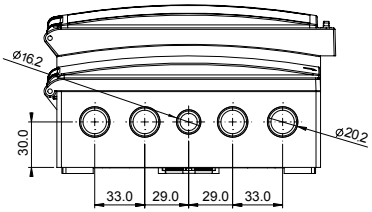

Remote Probe

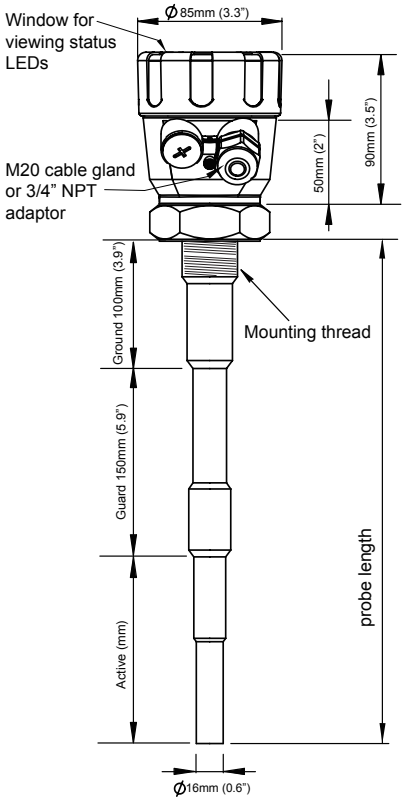

Integral Probe

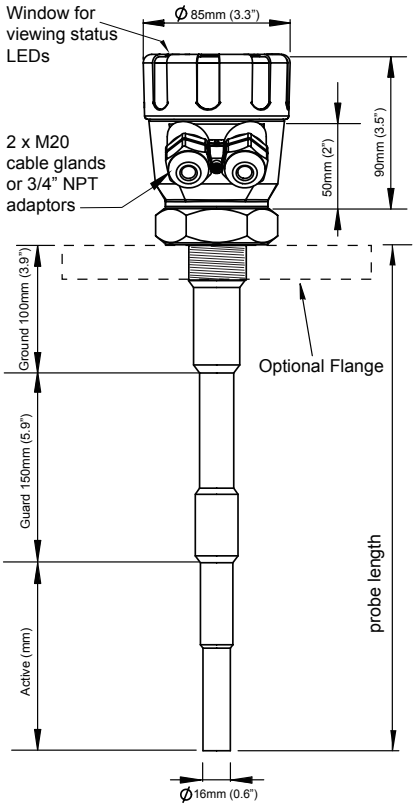

Probe Length (mm, inch)	Active	+ Guard + Ground
P05 (50mm, 2")	= 15mm, 0.6"	+ 35mm, 1.4"
P30 (300mm, 11.8")	= 50mm, 2"	+ 250mm, 9.8"
P50 (500mm, 19.7")	= 250mm, 9.8"	+ 250mm, 9.8"
P100 (1000mm, 39.4")	= 750mm, 29.5"	+ 250mm, 9.8"

Flexible Cable Probe

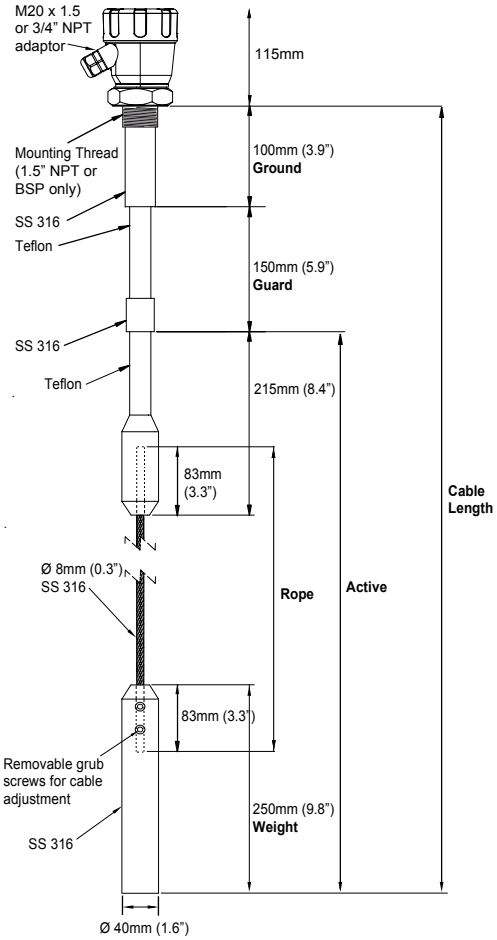

Probe Length (mm, inch)	Active	+ Guard + Ground	(Rope Length)
C100 (1000mm, 39.3")	= 750mm, 29.5"	+ 250mm, 9.8"	451mm, 17.8"
C200 (2000mm, 78.7")	= 1750mm, 68.9"	+ 250mm, 9.8"	1451mm, 57.1"
C300 (3000mm, 118.1")	= 2750mm, 108.3"	+ 250mm, 9.8"	2451mm, 96.5"

High Temperature Probe (<250°C, <482°F)

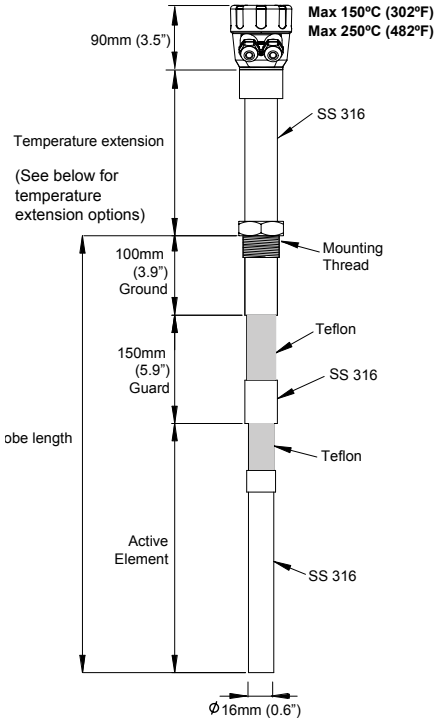

High Temperature Probe (450°C, 842°F)

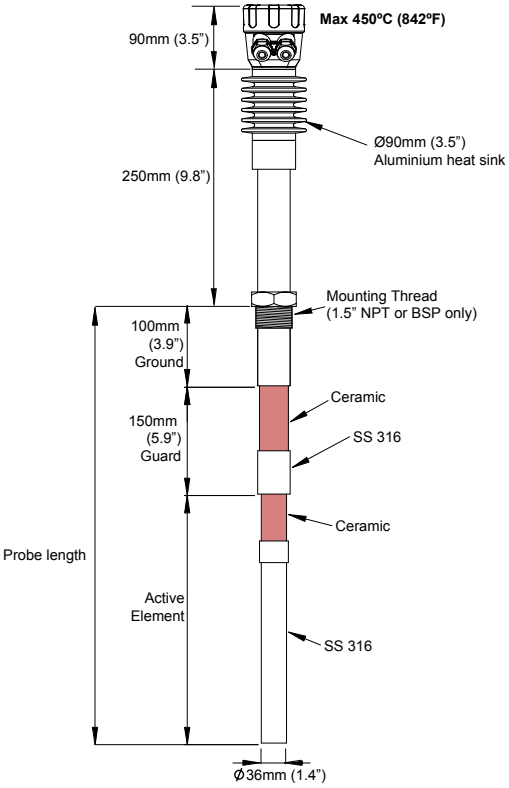

High Temperature Extensions (<250°C, 482°F)

Remote Probe or Integral Probe

X mm:

- Max. 80ºC (176ºF) ~ no temperature extension required
- Max.150ºC (302ºF) ~ 150mm (5.9")
- Max. 250ºC (482ºF) ~ 250mm (9.8")
- For the 450ºC (842ºF) Probe, different extension applies.

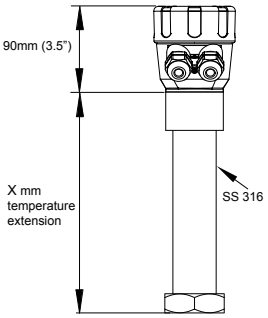

D168 Probe version (Flanged Mount)

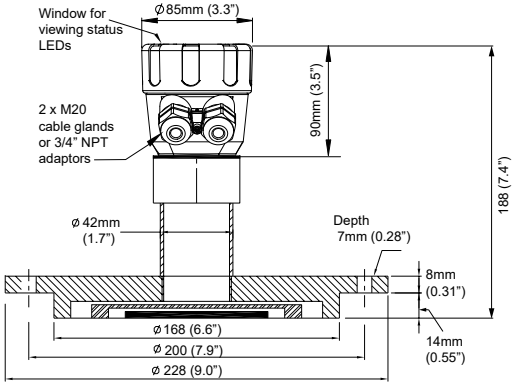

D33 Probe version (1" Mount)

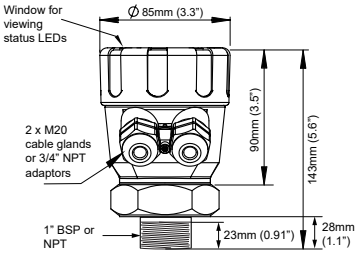

Pump Protection Version

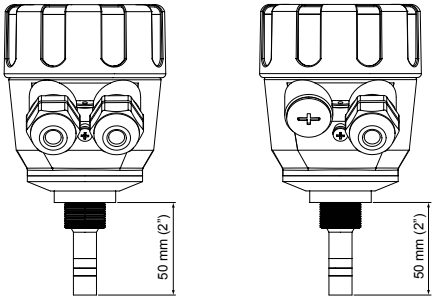

Sealing Cover

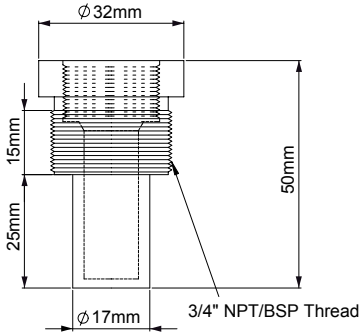

Mounting

Probes can be mounted from the top, side and bottom.

Points to consider when mounting:

A. Material infeed clearance

Install the probe away from the infeed to minimize the influence of build-up and impact forces, and to avoid false triggering from product flow.

B. Wall clearance

Install the probe far enough away from the wall to prevent the probe or cable from coming into contact with the vessel wall. Avoid creating a confined area where material could build-up over time.

See note ②

C. Nozzle clearance

Where possible, ensure the probe guard has at least 100mm clearance from the nozzle.

Correct Mounting in a Nozzle

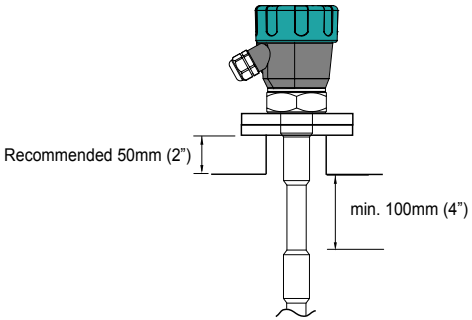

D. Top mounting

When top mounting, ensure adequate clearance is provided between probe and wall. Avoid creating a confined area where material could build-up over time. In the case of cable probe versions, ensure enough clearance is provided between the probe and wall to allow for build-up of material occurring on the wall.

See note ②

E. Side mounting

It is highly recommended to install any side mounted probe at a downward angle of 30-45°. Use a protection plate for side mounting where the probe may be subject to impact strain or collapsing material.

F. Bottom mounting

Bottom mounting is not recommended. Only mount from the bottom if no build-up of material occurs. If low level mounting is required, suitable options are shown in the diagram on *page 11*.

CORRECT MOUNTING NOTES:

(Refer to picture on page 11)

① Select correct probe for high temperature applications.

Allow adequate air flow for cooling extensions dissipate heat.

INCORRECT MOUNTING NOTES:

② Incorrect mounting because the probe is too close to the wall or roof. Positioning too close to a wall or roof will limit probe sensitivity. Material may build-up between the probe and the vessel.

③ Incorrect mounting because the probe's guard is mounted inside the nozzle. The correct arrangement is for the guard to protrude out of the mounting pipe at least 100mm. Product will build- up in the nozzle.

Mounting

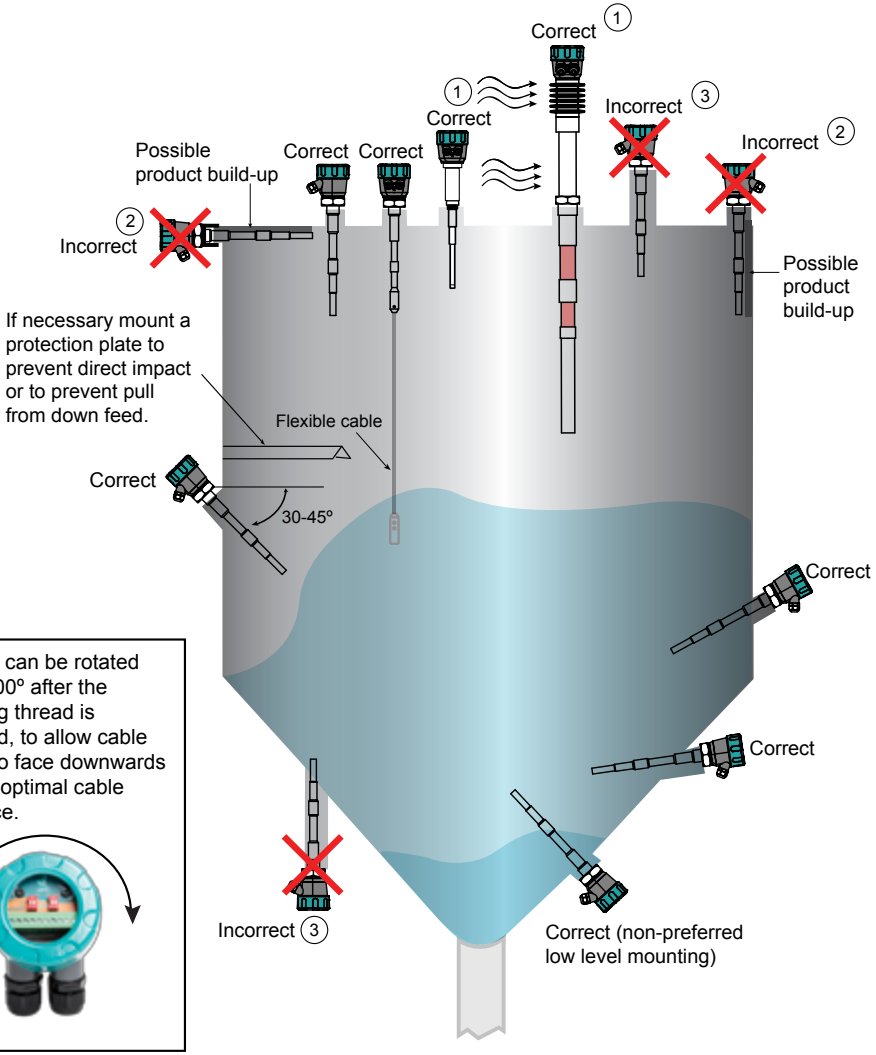

Housing can be rotated within 200° after the mounting thread is tightened, to allow cable entries to face downwards or allow optimal cable clearance.

Notes For Adjusting Probe Rope Length

The Gladiator rope type probe can be altered to any sensing length between approx. 750mm and 3m by cutting down from the standard sizes as required.

If a new rope is to be used, the rope should be cut to:

Cable probe length - 549mm = new wire rope length (total sensing length - 549mm)

For example, within a 1000mm (1m) cable:

1000 = [rope + 549]

So rope length = 451mm

Remove or install the probe weight grub screws with a 4mm Allen key.

When fastening the rope, apply thread-locking adhesive onto grub screws before re-installation.

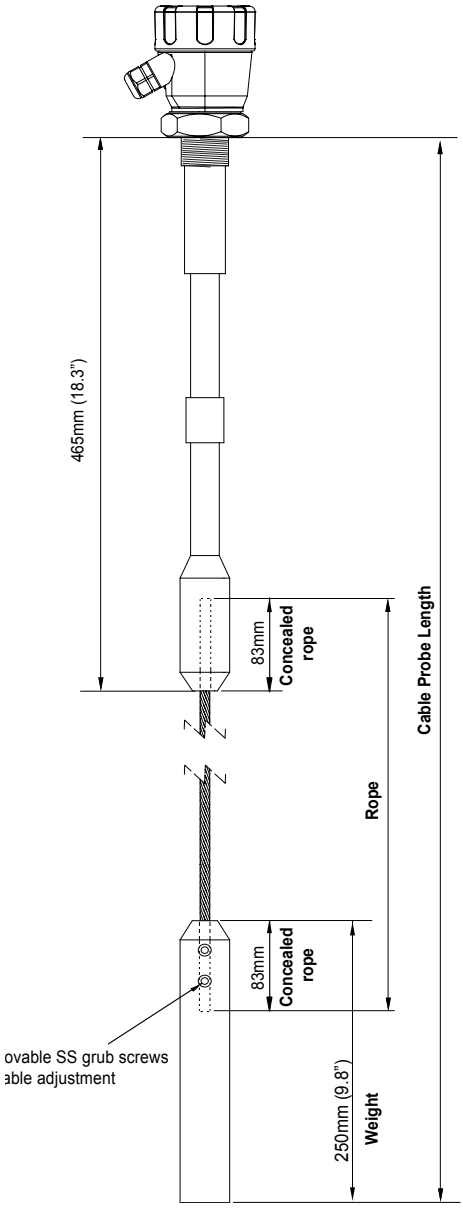

Integral Probe

Remove Plug-In terminal block for easier wiring.

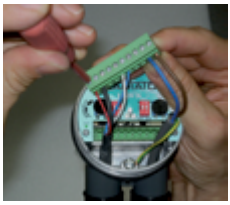

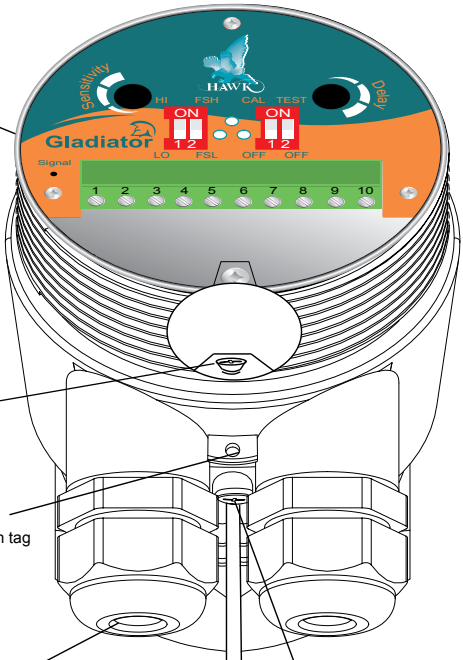

The AC earth/ground cable must be connected to the ground screw inside the housing when using AC power.

Hole for securing of optional identification tag

M4 grounding screw

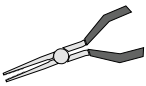

User pliers to extract terminal blocks

If only one cable is used for both power and output signal, then the second entry port must be plugged or blinded. Every Smart unit is supplied with two M20 glands (or 3/4"NPT adaptors) mounted on the unit and one blind plug loose.

Ground the housing to vessel, if vessel is metallic. Ground the housing to plant ground, if vessel is non-metallic.

Terminal Layout - Output Option S (SPDT)

RELAY				COMMS		DC-IN		AC-IN	
NC	COM	NO	Test	A	B	+	-	N	L1
1.	2.	3.	4.	5.	6.	7.	8.	9.	10.
				RS 485		12-30Vdc		80-265Vac	

Terminal Layout - Output Option D (DPDT)

RELAY						DC-IN		AC-IN	
NC1	COM1	NO1	NC2	COM2	NO2	+	-	N	L1
1.	2.	3.	4.	5.	6.	7.	8.	9.	10.
						7-30Vdc		80-265Vac	

Remote Probe to Amplifier

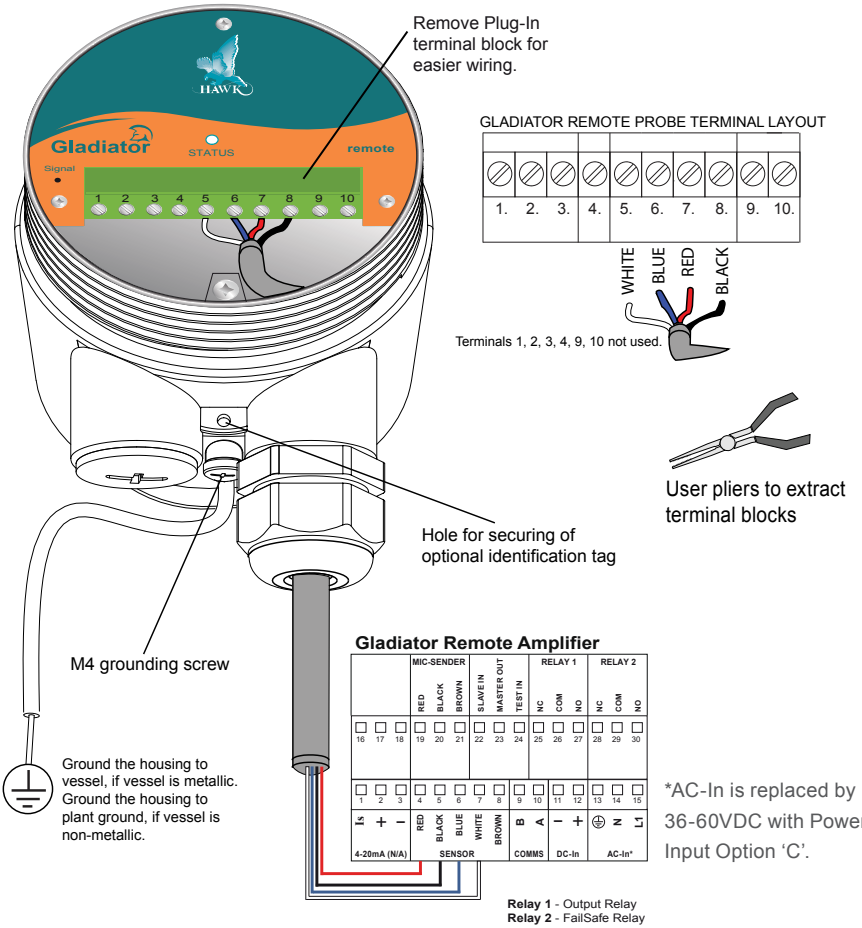

*AC-In is replaced by 36-60VDC with Power Input Option 'C'.

Cable type between Amplifier and Probe

- 4 conductor shielded twisted pair instrument cable
- Conductor size dependent on cable length
- BELDEN 3084A, DEKORON or equivalent
- Max: BELDEN 3084A = 500m (1640ft)
- Max: DEKORON IED183AA002 = 350m (1150ft).

Relay Functions

Level Switch Contact Action

Relay - for Integral Probe Version
(Set Relay Action selection switch page 18)

Relay 1 - for Remote Version
(Set 'Relay Action' parameter pages 25 and 26)

*It is possible for the Gladiator to switch state before actual product contact with the probe. State 2 represents product being detected by the probe, even if it occurs without contact.

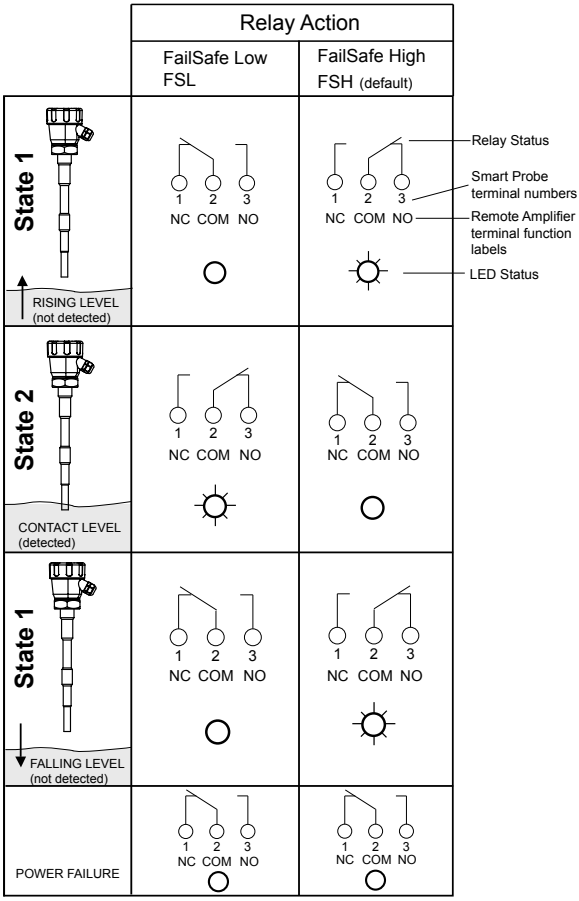

FailSafe Switch Contact Action

Relay 2 - Remote version only.
For Integral Probes the Test terminal can act as a solid state output with a similar function. *(See page 17)*

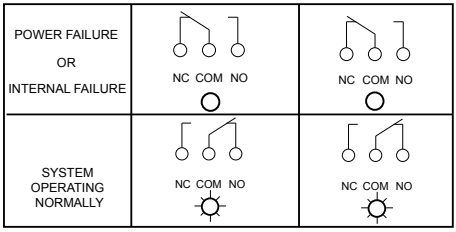

Multidrop Connections

Multidrop GPRS Connection*

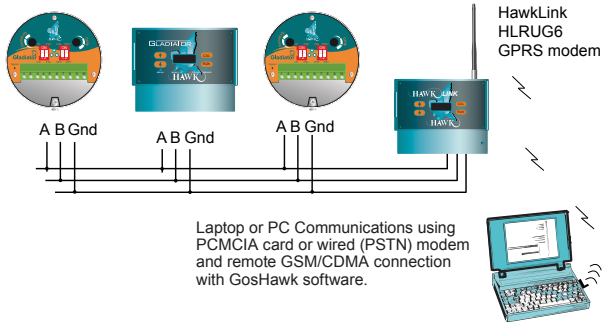

Multidrop Connection Using HawkLink USB*

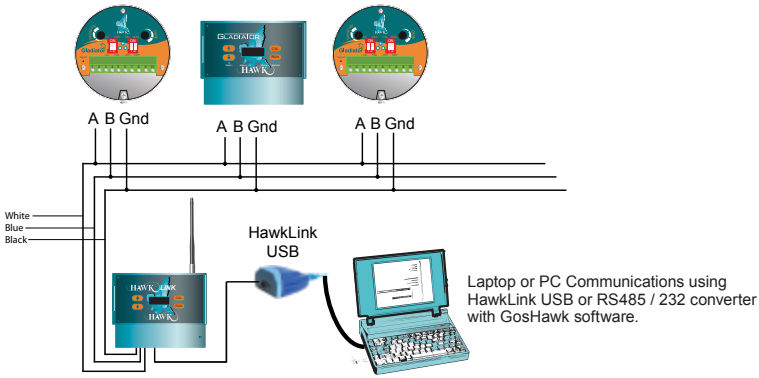

Multidrop Connection to PLC/DCS/SCADA*

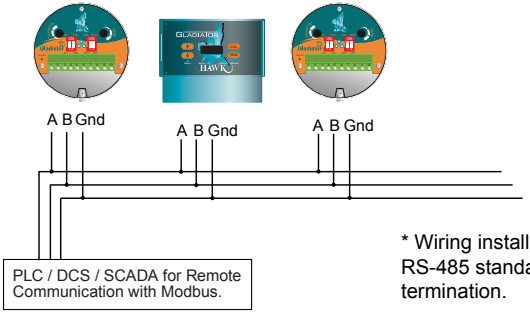

* Wiring installation should follow RS-485 standards for layout and termination.

Test Terminal Function Selection (SPDT Only)

Test input mode

Test switch must be in 'TEST' (ON) position on Integral Probe - function always enabled on Remote Amplifier. Test terminal acts as an input for remote testing of the instrument's switching function. Used to check for malfunction of unit from a remote position, PLC, SCADA etc. For more information see *page 20*.

TEST INPUT FROM PLC/SCADA/DCS DIGITAL OUTPUT

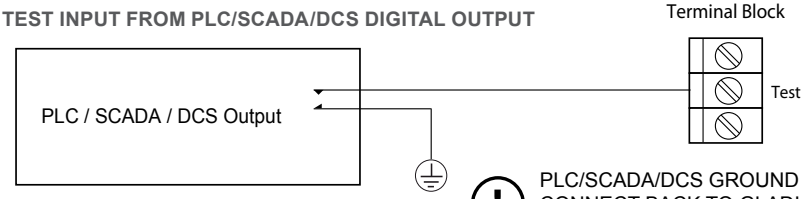

OPERATOR CONTROLLED PRESS TO TEST

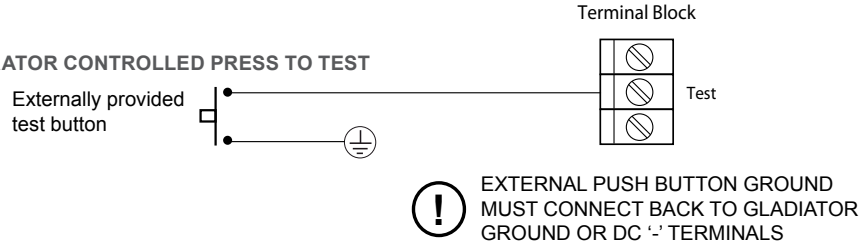

FAILSAFE OUTPUT MODE (Test switch must be in the 'OFF' position - default setting)

Test terminal will provide an output which is able to switch an external failsafe relay or PLC/SCADA/DCS input. During normal system operation this terminal will internally switch a solid state (transistor) output to ground (or DC '-'). If power fails or an internal system failure occurs, the terminal will act as an open circuit.

To switch an external relay

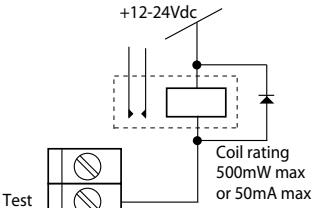

Relay will turn on during normal system operation or off in failed or unpowered conditions.

To a PLC input

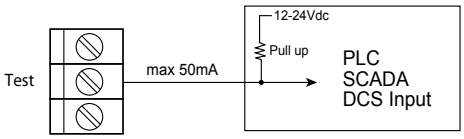

Input will detect '0' state during normal system operation, or '1' in failed or unpowered conditions.

Integral Probe Functionality Layout

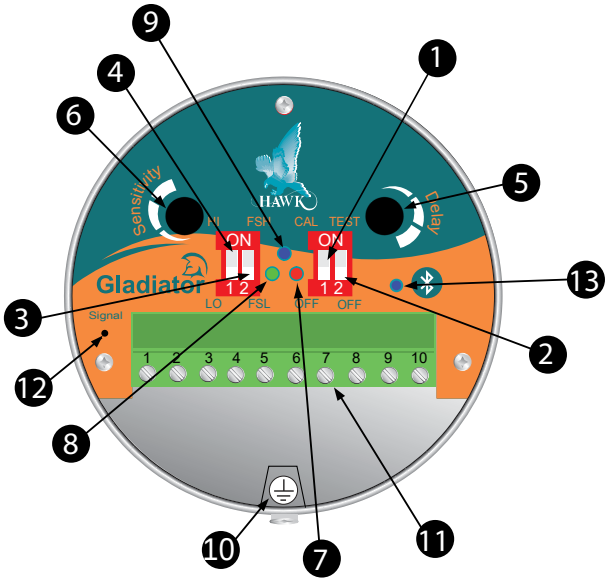

Functionality Description (bold is default)

1. Mounting Calibration switch CAL/**OFF**
2. Test input function select TEST/**OFF**
3. Relay action selection switch
   FSH - FailSafe High
   FSL - FailSafe Low
4. **HI** / LO sensitivity switch
5. Delay Potentiometer (0-20 sec) (Default 0 sec. at minimum position)
6. Sensitivity Potentiometer Default **50% = 12 o'clock**
7. RED LED: Relay status
   ON when relay coil is energised
8. GREEN LED: Power / Status
   Blinks to indicate the functioning is correct and no media is detected.
   Continuously ON when media is detected.
9. BLUE LED:
   Blinking indicates calibration function is on.
   Continuously ON indicates failed calibration.
10. AC Ground - must be used for AC powered installations
11. Removable terminal block - plug in type
12. Signal voltage test point - Not used with Admittance
13. Bluetooth Active LED (Bluetooth units only)

Integral Probe Version

1. Mount the unit in its actual position

(See mounting procedure - pages 10-11)

- Make sure that external ground wire is connected between the outside ground screw on the Gladiator housing and the roof/wall/side of the silo/ tank/vessel/chute (for non metallic tanks make sure that external ground wire is connected between the same outside ground screw on the housing and the general plant ground potential).

2. Check where the actual level is relative to the probe

- Make sure that product is not touching the probe - ideally it needs to be > 500mm away (if the silo/ vessel/tank/chute is very small you must ensure that the material is as far away as possible - it must not be touching the probe).

3. Turn the power on

- The green LED will either stay on for 2 seconds then begin flashing or stay on permanently to indicate operation.

4. Select the required relay contact action

- The Relay can switch 'ON' or 'OFF' as the product approaches the probe and switch 'ON' or 'OFF' in response to an instrument failure *(for details see page 15).*
- Set the relay action selection switch position (FSL or FSH) depending on your requirements.

5. Cancel influence of mounting and/or build up

- Do not proceed with this step unless the product is not touching the probe. Ideally the level needs to be > 500mm away.
- Switch the Mounting Calibration switch to 'CAL' (ON) position.
- The Blue LED will blink to indicate that mounting calibration is now in progress.
- Wait for at least 10 sec. then switch the mounting calibration switch to 'OFF' position.
- The Blue LED should turn off after a short time.
- The Blue LED will stay on if there was a calibration error.
- If this is the case please check that the probe is not touching the product or the mounting, then try the calibration again.
- If mounting calibration was successful the blue LED should be off and the Green LED should blink every 2 sec.
- Unit is now able to cancel influence of mounting and/or build-up and probe history has been cleared.
- The reverse is also true.

Integral Probe Version

6. Select the sensitivity

There are two adjustments controlling the sensitivity of the switch point:

6.1. The 'HI/LO' sensitivity switch is used to set your unit depending on the dielectric properties of the product to be measured. This switch sets the range of adjustment possible with the sensitivity potentiometer.

- If the material to be detected has a lower dielectric constant than 10 - set the switch to 'HI' (ON)-default.
- If material to be detected has a higher dielectric constant than 10 - set switch to 'LO'.
- If you are not aware of your material dielectric constant – set the switch to 'HI' (ON) - default.

6.2 The sensitivity potentiometer

- Set the potentiometer according to your requirements.
- A 12 o'clock setting (50%) - default, will cover the majority of instances - for the remaining instances, turning the potentiometer anti clockwise will decrease sensitivity.
- Switch point will then occur with the material nearer to the probe or more in contact with the probe than before.

7. Select the time delay

- Set the required delay using the Delay potentiometer (Default is 0 sec. at minimum position).
- Turn the potentiometer clockwise if any delay is required.
- Maximum rotation is ¾ of a revolution.
- Max delay is 20 sec.
- The selected delay will be used for both an ON delay and an OFF delay.*

8. Test function (used to check for malfunction of unit from remote position, PLC, SCADA etc)

- Select the desired Test function by switching the 'Test' switch (Default = 'OFF').
- **TEST' (ON) Position:**
  - Test function is selected.
  - Test terminal (terminal number 4 of Integral probe) is used as an input to the unit.
  - The test function allows you to check the functionality of the unit.
  - Applying a ground wire to the Test terminal will change the state of the relay. It will hold this state until the ground is removed, then it will change back to the standard running mode.
  - If the unit was in a Fail mode then the relay will not change status.
- **'OFF' (Default) Position:**
  - Fail safe output function is selected.
  - Test terminal (terminal number 4 of Integral probe) will function as an open drain drive.
  - This can be used to drive a relay or an active low PLC input to detect a Fail condition.
  - In normal operation mode the Test terminal will output Zero Volts (Short to GND).
  - In Fail or unpowered mode the Test terminal will be open circuit.

**Setting of different time ranges for the delay potentiometer for ON delay and OFF delay is possible using a PC connected via GosHawk II software. By default, both will have the same time adjustment range (20 sec max) and adjustment will result in equal ON delay and OFF delay.*

Remote Functionality Layout

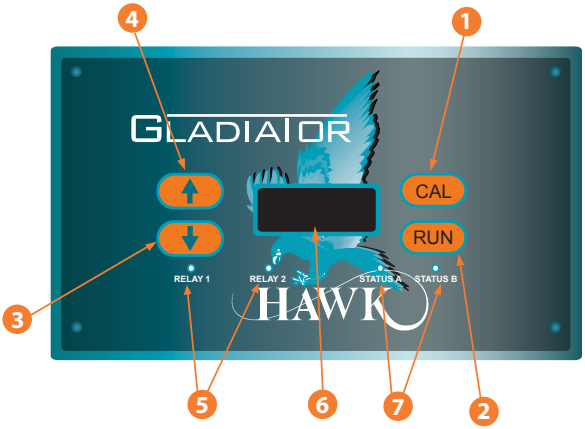

1. Calibrate button
2. Run button
3. Down button
4. Up button
5. Relay status LEDs 1 and 2
6. Display (LCD with backlight)
7. Status LEDs A and B
   - Status A flashes with probe to amplifier communications
   - Status B has no function in this product

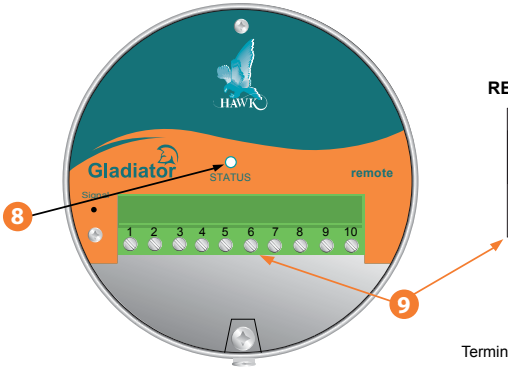

REMOVABLE REMOTE PROBE TERMINAL BLOCK

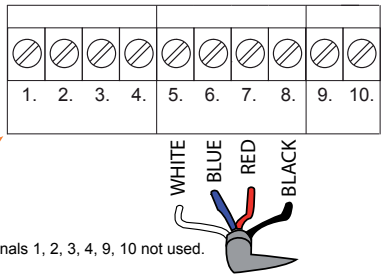

Terminals 1, 2, 3, 4, 9, 10 not used.

8. GREEN LED: Power / Status
   Blinks every 1/2 second to indicate that functioning is correct and no medium is detected.
   LED on continuously indicates correct functioning and media is detected.

9. Removable terminal block - plug in type

Remote Version

1. Mount the unit in its actual position

(See mounting procedure - page 10-11)

- Make sure that external ground wire is connected between the outside ground screw on the Gladiator housing and the roof/wall/side of the silo/tank/vessel/chute (for non metallic tanks make sure that external ground wire is connected between the same outside ground screw on the housing and the general plant ground potential.).

2. Check where the actual level is relative to the probe

- Make sure that product is not touching the probe - ideally it needs to be > 500mm away (if the silo/vessel/tank/chute is very small you must ensure that the material is as far away as possible - it must not be touching the probe).

3. Turn the power on

- The display will turn on and the failsafe relay will switch.
- The display will scroll through the following messages: Hawk, Amp SerialNo, Type, Amp SoftVer, Device ID, SensorSerial, SensorModel, Sens SoftVer, Sensor Addrs, Gladiator System Amp.
- The unit will then go into operational mode displaying 'Switch' with a % value. This % value represents the changing admittance reading.

4. Simple "1-minute" Setup - Follow the flow chart

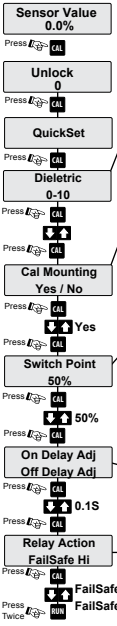

Select Dielectric Constant

Under 'App Type' select Dielectric closest to the measured material

Cancel Influence of Mounting and/or Buildup

Do not proceed with this if material is covering the probe. Ideally it should be > 500mm away.

Select 'Yes' to start the mounting calibration. 'Wait' will be displayed during the calibration for up to 30 seconds.

Unit is now able to cancel the influence of the mounting and/or build-up. The % reading has been zeroed with the existing process conditions and probe history log has been cleared.

Select the Switch point

The output relay will switch at the entered % value. The default value of 50% will be suitable for detecting most media. For detection of products having low dielectric constant, select a lower % value and vice versa. A higher % value will require the product to come nearer to the probe or cover more of the probe before switching will occur. When the level falls the relay will switch back at half of the entered switch point % value.

Set the Relay on / off time Delay

Set the time to be used for each of the switch on and switch off delays.

Select the required relay action

The Relay can switch 'ON' or 'OFF' as the product approaches the probe and switch 'ON' or 'OFF' in response to an instrument failure. For details see *page 15*.

Remote Main Menus & Interface - Remote System

Note: Parameters may vary depending on older software revisions

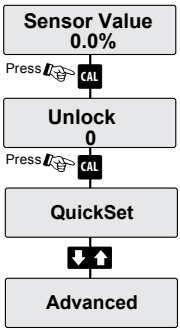

Sensor Value / Operational Diagnostics

Default unlock code = 0

Standard Parameters

Advanced Parameters

CAL **Select / Edit / Save**

RUN **Run / Return**

Scroll up / down

Operational Diagnostics (Remote Type Only)

The diagnostic displays appear on the top line of the LCD, after pressing the Up or Down push button when the Gladiator is in its normal running mode.

The diagnostics provide the user with valuable performance feedback on how the instrument is performing whilst in operation.

The measured reading Sensor Value (%) continues to be displayed on the second line of the LCD during diagnostic viewing on the top line. Output relays will continue to operate during diagnostic viewing.

Diagnostic	Description	Notes
Sensor Value	Sensor value indicates detected material. 0% indicates nothing is touching the probe. The peak amount of % depends on the Display Span setting.	This % is also used by the Switch Point parameter for relay control.
• Normal • Failed	• Unit in normal operation • Unit is in failsafe condition	
Temp	Measured temperature inside probe housing.	
Delay	Dynamic switch delay time indication	
Min	The minimum recorded Sensor Value % since last log reset	
Max	The maximum recorded Sensor Value % since last log reset	
SW Off	For the level relay to switch to state '1', the Sensor value must drop below this SW Off % for the duration of the off delay time.	Switch mode 'Auto' will automatically set the SW Off % to 1/2 of SW On %
SW On	For the level relay to switch to state '2', the Sensor value must exceed this SW On % for the duration of the on delay time.	

Quickset Menu - Parameters

Parameter	Description	Options
App Type	Select pre-configured settings based on Dielectric Constant of the measured material	• Dielectric 0-10 • Dielectric 0-5 • Dielectric 10-50 • Dielectric >50
Cal Mounting	Performs a Cal Mount in which the unit automatically configures itself based on the selected App Type and the mounting environment. Vessel must be empty.	• Yes / No
Switch Point	This is the switch on / off sensor value % for relay actions. In 'Auto' mode (set in Advanced menu) switch off will be default to 1/2 of this value.	• Adjustable
On Delay Adj	Set on delay time for relay 1.	• Adjustable in seconds
Off Delay Adj	Set off delay time for relay 1.	
Relay1Action	Adjust the Relay action to be energised or de-energised during normal operation	• FailSafe Hi • FailSafe Low
Lock Code	Set a lock code to prevent unauthorised access	• Default 0

Advanced Menu - Parameters

Parameter	Description	Sub Menu
Switch Mode	• Auto - Switch On% set in Quickset, Switch Off% automatically configured • Manual - Manually adjust Switch On and Switch Off %	• Switch On% • Switch Off%
Relay2Action	Set Relay2Action as one of the below: • **Failsafe** - Relay2 triggers on failsafe conditions • **Relay2** - Mirrors Relay1 action to act as a second / backup relay for the system	• Failsafe • Relay2
View Log	View logged data since last re-set or cal mount	• Min Sensor% • Max Sensor% • Min Temp • Max Temp
Reset Log	Reset logged data	• Yes • No
Comms Type	Adjust & select additional communications, baud rate and device ID. All GSA units by default include Modbus.	• DeviceNet (not functional) • Profibus (not functional) • HART (not functional) • Modbus / Device ID / Baud Rate
Back Light	Turn on / off LCD backlight	
Display Span	Changes the displayed Sensor% multiplier. This will not adjust any performance based function of the unit, only the digits used to display the Sensor%.	• Span 0 - 40000 • Span 1 - 30000 • Span 2 - 20000 • Span 3 - 10000 • Span 4 - 5000 • Span 5 - 1000
Probe Avg	Probe Avg is a output damping parameter. Increase to smooth out unwanted fluctuations or instability of Sensor%.	• Adjustable (default 4)
LoadDefaults	Reset system to defaults (amplifier and/or sensor)	• Yes • No
InputVolChk	Used for power related failsafe. When active the unit will switch to failsafe mode if input voltage drops below required power. When not active unit will display 'Input Voltage too low' on the display if input voltage drops below required power.	• Yes • No

Diagnostics

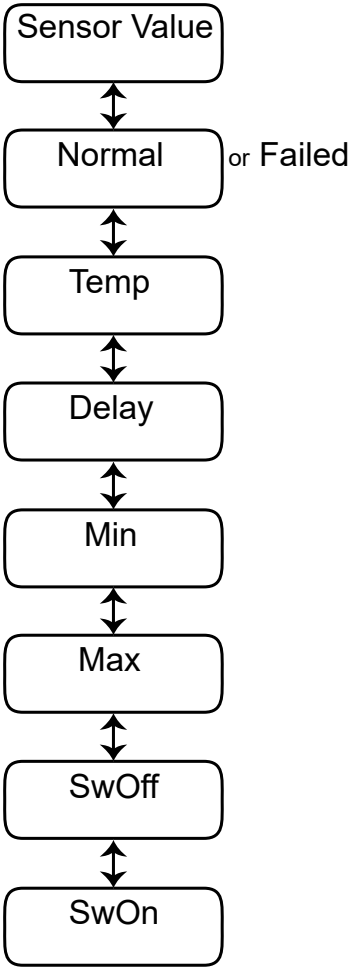

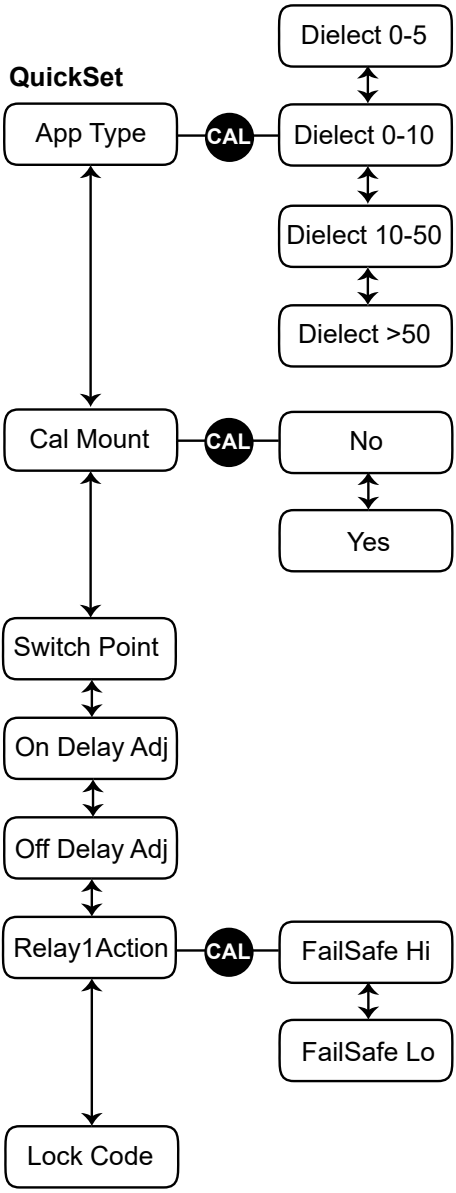
QuickSet
App Type
CAL
Dielect 0-5
Dielect 0-10
Dielect 10-50
Dielect >50
Cal Mount
CAL
No
Yes
Switch Point
On Delay Adj
Off Delay Adj
Relay1Action
CAL
FailSafe Hi
FailSafe Lo
Lock Code

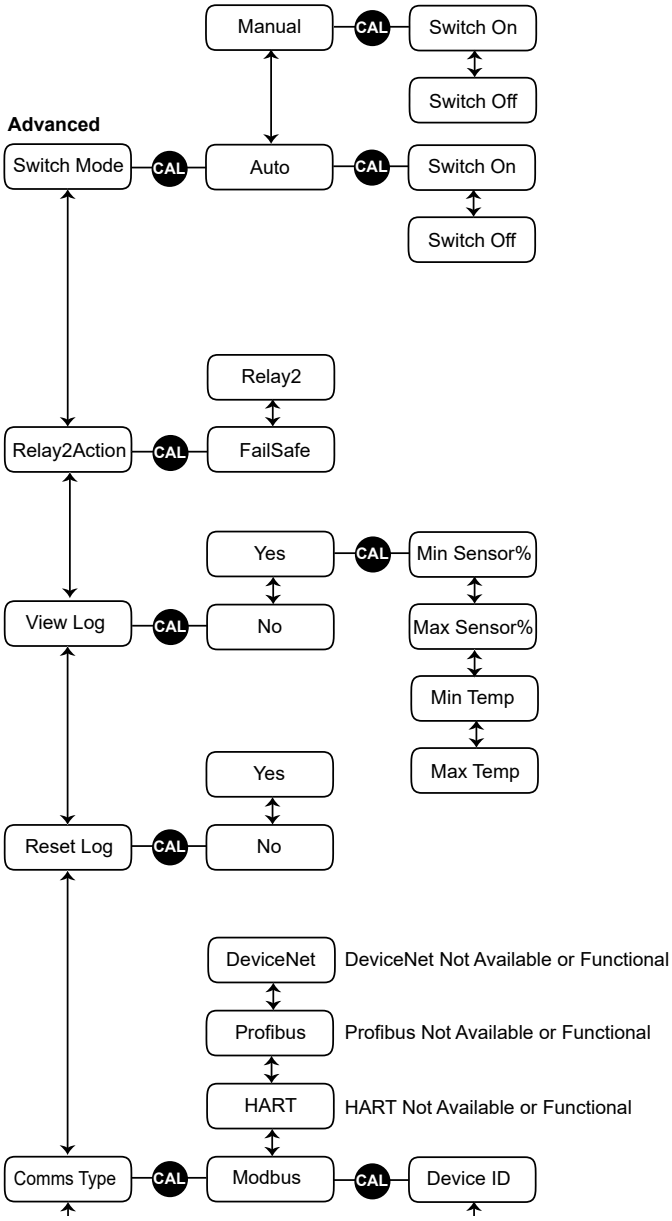
Manual
CAL
Switch On
Switch Off
Advanced
Switch Mode
CAL
Auto
CAL
Switch On
Switch Off
Relay2
Relay2Action
CAL
FailSafe
Yes
CAL
Min Sensor%
View Log
CAL
No
Max Sensor%
Min Temp
Max Temp
Yes
Reset Log
CAL
No
DeviceNet
DeviceNet Not Available or Functional
Profibus
Profibus Not Available or Functional
HART
HART Not Available or Functional
Comms Type
CAL
Modbus
CAL
Device ID

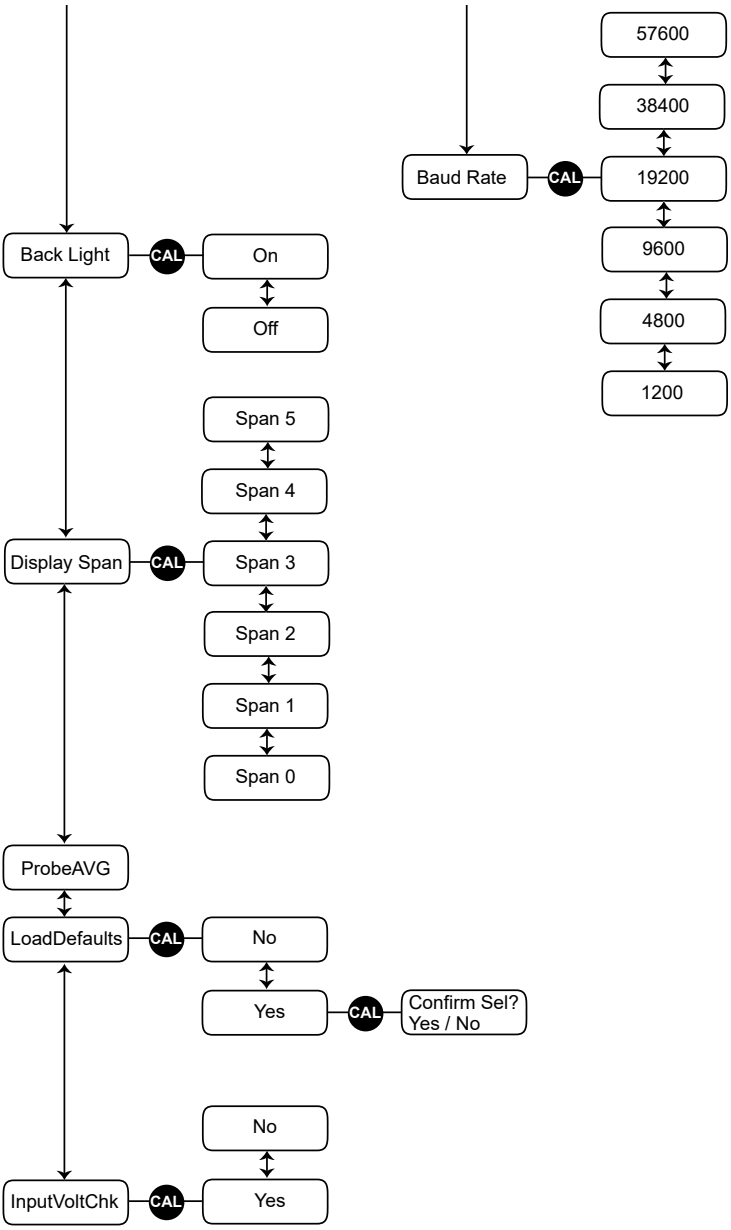
Back Light
CAL
On
Off
Display Span
CAL
Span 5
Span 4
Span 3
Span 2
Span 1
Span 0
ProbeAVG
LoadDefaults
CAL
No
Yes
CAL
Confirm Sel?
Yes / No
InputVoltChk
CAL
No
Yes
Baud Rate
CAL
57600
38400
19200
9600
4800
1200

Remote Version

Operation Setup Check

After final adjustment it is advisable to check the performance of the probe relative to your entered settings.

Ensure there is no mounting influence.

- When calibrating the mounting of the unit, there should be no product within at least 500mm of the probe. After calibrating the unit the Sensor Value (%) should read approximately 0.0% with no product near or touching the probe.
- Allow infeed to occur and note the Sensor Value (%) change (if there is any) - as the level gets closer to the probe the Sensor Value (%) number will increase and continue to increase as the product gets closer to, touches and covers the probe.
- The Gladiator is capable of switching repeatably and reliably without product contacting the probe for a wide variety of materials. Some very low dielectric materials may need to touch the probe to be detected.
- The Sensor Value (%) will reach its maximum after the probe is covered - but the Switch Point can be set at any value less then the maximum. It is recommended to select the set point more than 10% below the maximum value seen with material touching the probe.
- For instance the following readings may occur during filling:

	Sensor Value (%)
Before filling	0.0%
Filling starts	0.7%
Filling continue	4.9%
Filling continue	27.5%
Material approaching probe	48.5%
Material contacts probe	96.5%
Material covers probe	285.7%

A. You may choose to leave the Switch Point at the default 50%. The Gladiator will switch reliably without contact of the material to the probe.

B. You may choose to adjust the Switch Point to 100% to switch when the product contacts the probe.

- By default the Switch Off % is set at 1/2 of the Switch Point. You may wish to adjust this to a higher or lower number. This is adjustable in the Advanced Menu by selecting Switch Mode - Manual. You can then manually select your Switch On and Switch Off values.
- In general, you should not choose the Max Sensor % (Max) value nor the Min Sensor % (Min) value as the Switch Point.
- If possible, always have the Switch On % at a value of at least 10% less than the Max Sensor % (Max) value and Switch Off at least 10% more than the Min Sensor % (Min).
- If the % change on the display is too small then the Display Span parameter in the Advanced menu can expand the display resolution (select a larger number - smaller raw range) and vice versa. Changing the Display Span will change Switch Point value.

Integral Probe Version

AS2100 Gladiator Admittance Switch - Integral Probe

Power Supply
- B 12-30 VDC
- U 12-30VDC and 90-260VAC

Output Options
- S 1 x SPDT Relay, Modbus
- D 1 x DPDT Relay, Modbus

Housing
- S Powder Coated Aluminium
- C 316L Stainless Steel

Guard Length
- 1 Standard

Temperature[1]
- 1 Max. 80°C (176°F)
- 2 Max. 150°C (302°F)
- 3 Max. 250°C (482°F)
- 4 Max. 450°C (842°F) (Mounting Option TB15/TN15, Flanged only)

Probe Type[1]
- 1 316L rod
- 2 Teflon Insulated 316L rod
- 3 Cable

Mounting[1] (Flanges available)
- TN07 3/4" NPT Thread
- TB07 3/4" BSP Thread
- TN10 1" NPT Thread
- TB10 1" BSP Thread
- TN15 1.5" NPT Thread
- TB15 1.5" BSP Thread

Approvals[2]
- X Not Required
- A20A ATEX Grp II Cat 1/2 D
- A20 ATEX Grp II Cat 1/2 D
- i20A IECEx Zone 20
- i20 IECEx Zone 20 or 21
- A22 ATEX Grp II Cat 3 GD

(P)Probe[3] **(C)Cable Length**[3]
- P10 100mm (4")
- P30 300mm (11.8")
- P50 500mm (19.6")
- P100 1000mm (39.3")
- C100 1000mm (39.3")
- C200 2000mm (78.7")
- C300 3000mm (118.1")
- C500 5000mm (196.9")

AS2100	B	S	S	1	1	1	TB15	X	P30

[1]See Probe Configuration for combination options
[2]See Approvals Section for critical details
[3]Custom lengths available. Consult Factory

Remote Version

Remote Amplifier

GSA Remote Gladiator System Amplifier

Housing
- S Polycarbonate

Power Supply
- B 12-30 VDC
- C 36-60VDC
- U 12-30VDC and 90-260VAC

Output Options (inc. Modbus)
- S 2 x SPDT Relays
- X 2 x SPDT Relays & 4-20mA output
- E 2 x SPDT Relays & Modbus Over Ethernet
- R 2 x SPDT Relays & Modbus Over Wi-Fi
- E 2 x SPDT Relays & Modbus Over Bluetooth

Approvals
- X Not Required
- A22 ATEX Grp II Cat 3 GD T75°C IP67 Tamb -40°C to 65°C

GSA S U S

Connection Cable

CA-GMR **Pre-cut cable for remote system**
- 10 10m cable
- 20 20m cable
- 30 30m cable
- 50 50m cable
- 100 100m cable

CA-GMR 10

Lengths above 100m available via special order

Mounting Flanges

FLA - **Flange Size**
- 1 1" or DN25 or 25mm
- H 1 1/2" or DN40 or 40mm
- 2 2" or DN50 or 50mm
- K 2 1/2" or DN65 or 65mm
- 3 3" or DN80 or 80mm
- L 3 1/2" (ANSI ONLY)
- 4 4" or DN100 or 100mm

Flange Type
- A1 ANSI B16.5 150LB FLANGE
- A3 ANSI B16.5 300LB FLANGE
- A6 ANSI B16.5 600LB FLANGE
- A9 ANSI B16.5 900LB FLANGE
- AA ANSI B16.5 1500LB FLANGE
- AB ANSI B16.5 2500LB FLANGE
- D6 DIN2527 PN6 FLANGE
- D0 DIN2527 PN10 FLANGE
- D1 DIN2527 PN16 FLANGE
- D2 DIN2527 PN25 FLANGE
- D4 DIN2527 PN40 FLANGE
- J5 JIS 5K FLANGE
- J0 JIS 10K FLANGE
- J1 JIS 16K FLANGE
- J2 JIS 20K FLANGE
- J4 JIS 40K FLANGE
- S1 AS 2129 Table D
- S2 AS 2129 Table E
- S3 AS 2129 Table F
- S4 AS 2129 Table H

-

Material
- SS SS316L

-

Thread Type(internal)
- TB07 3/4" BSP THDs
- TB10 1" BSP THDs
- TB15 1 1/2" BSP THDs
- TN07 3/4" NPT THDs
- TN10 1" NPT THDs
- TN15 1 1/2" NPT THDs

FLA - 2 A1 - SS - TB15

Remote Probe

AS2200 Remote Gladiator Admittance Probe

Housing

S Powder Coated Aluminium
C 316L Stainless Steel

Guard Length

1 Standard

Temperature[1]

1 Max. 80°C (176°F)
2 Max. 150°C (302°F)
3 Max. 250°C (482°F)
4 Max. 450°C (842°F) (Mounting Option TB15/TN15, Flanged only)

Probe Type[1]

1 316L rod
2 Teflon Insulated 316L rod
3 Cable

Mounting[1] (Flanges available)

TN07	3/4" NPT Thread
TB07	3/4" BSP Thread
TN10	1" NPT Thread
TB10	1" BSP Thread
TN15	1.5" NPT Thread
TB15	1.5" BSP Thread

Approvals[2]

X	Not Required
A20A	ATEX Grp II Cat 1/2 D
A20	ATEX Grp II Cat 1/2 D
i20A	IECEx Zone 20
i20	IECEx Zone 20 or 21
A22	ATEX Grp II Cat 3 GD

(P)Probe[3] **(C)Cable Length**[3]

P10	100mm (4")
P30	300mm (11.8")
P50	500mm (19.6")
P100	1000mm (39.3")
C100	1000mm (39.3")
C200	2000mm (78.7")
C300	3000mm (118.1")
C500	5000mm (196.9")

AS2200	S	1	1	1	TB15	X	P30

[1]See Probe Configuration for combination options
[2]See Approvals Section for critical details
[3]Custom lengths available. Consult Factory

Pump Protection Version

AS2100 Gladiator Admittance Pump Protection Probe

Power Supply
B 12-30 VDC
U 12-30VDC and 90-260VAC

Output Options
S 1 x SPDT Relay, Modbus
D 1 x DPDT Relay, Modbus

Housing
S Powder Coated Aluminium
C 316L Stainless Steel

Guard Length
2 Short guard

Temperature
1 Max. 80°C (176°F)
2 Max. 150°C (302°F)
3 Max. 250°C (482°F)

Probe Type
1 316L rod

Mounting
TB05 1/2" BSP thread
TN05 1/2" NPT thread

Approvals (see Approvals Section for critical details)
X Not Required
A20A ATEX Grp II Cat 1/2 D
A20 ATEX Grp II Cat 1/2 D
i20A IECEx Zone 20
i20 IECEx Zone 20 or 21
A22 ATEX Grp II Cat 3 GD

(P)Probe Length
P05 50mm

AS2100	B	S	S	2	1	1	TN05	X	P05

Flush Mount Version

AS2100 Gladiator Admittance Flushed Mount Integral Probe

Power Supply
B 12-30 VDC
U 12-30VDC and 90-260VAC

Output Options
S 1 x SPDT Relay, Modbus
D 1 x DPDT Relay, Modbus

Housing
S Powder Coated Aluminium
C 316L Stainless Steel

Guard Length
3 Not Required (In-Built)

Temperature
1 Max. 80°C (176°F)

Probe Type
1 316L rod

Mounting
F200 Flanged Mount (P.C.D 200mm)
TN10 1" NPT thread
TB10 1" BSP thread

Approvals
X Not Required

(D)Probe Diameter[1]
D168 168mm (F200 Flanged Mount type only)
D33 33mm (TN10 / TB10 mounting type only)

[1]See Probe Configuration for combination options
[2]See Approvals Section for critical details

AS2100	B	S	S	3	1	1	TN10	X	D168

Approvals

Part Code	Condition	Rating	I.S Barriers Req
A20A	Open Vessel	ATEX Grp II Cat 1/2 D Ex iaD A20 IP65 T100°C for Tamb -20°C to 80°C	Yes (2)
A20	Closed Vessel (Internal)	ATEX Grp II Cat 1/2 D Ex iaD A20 IP65 T100°C	Yes (2)
A20	Closed Vessel (External)	ATEX Grp II Cat 1/2 D Ex iaD A20 IP65 T100°C for Tamb -20°C to 80°C	Yes (2)
i20A	Open Vessel	IECEx Zone 20 (Ex iaD tD A20 IP65 T100°C Ta -20°C to 80°C)	Yes (2)
i20	Closed Vessel (Internal)	IECEx Zone 20 (Ex iaD 20 IP65 T100°C Ta -20°C to 80°C)	Yes (2)
i20	Closed Vessel (External)	IECEx Zone 21 (Ex iaD A21 IP65 T100°C Ta -20°C to 80°C	Yes (2)
A22	None	ATEX Grp II Cat 3 GD T75°C IP67 Tamb -40°C to 65°C	No

Consult appropriate Safety Instructions for critical information

Probe Configurations

Probe Option	Wetted Probe Materials	Mounting Option	Temperature Option	Max. Pressure
P^x, C^x	316L / PTFE	TB05, TB07, TB10, TB15 TN05, TN07, TN10, TN15 Flanged	1, 2, 3	10 bar (145 Psi)
P^x, C^x	316L / Ceramic	TB15 TN15 Flanged	4	1 bar (14.5 Psi)
D33	316L / PTFE / PEEK	TB10 TN10	1, 2, 3	60 bar (870 Psi)
D168	316L / PTFE	F200	1, 2, 3	1 bar (14.5 Psi)

^{x} = (P)robe / (C)able Length

Operating Voltage

- 12 - 30VDC (residual ripple no greater than 100mV)
- 80 - 260VAC 50/60Hz
- 36 - 60VDC.

Power Consumption

- <0.8W @ 24VDC
- <6W @ 48VDC
- <5VA @ 240VAC
- <3VA @ 115VAC.

Communications

- GosHawk, Modbus.

Relay Output: (1) Integral (2) Remote

- Remote: 2 x Form 'C' (SPDT) contacts, rated 5A at 240Vac resistive
- Integral: 1 x DPDT or 1 x SPDT rated 5A at 240Vac resistive
- Remote failsafe test facility for one relay (SPDT only).

Measurement Range

- 0.2pF - 100nF.

Resolution

- 0.01 pF.

Electronic Accuracy

- 0.05 pF.

Stability

- 0.01% / °C.

Operating Temperature

- Remote electronics -40°C (-40°F) to 80°C (176°F)
- Integral Probe -40°C (-40°F) to 450°C 842°F)*
- Remote Probe -40°C (-40°F) to 450°C (842°F)*.

**See Probe Configurations*

Probe/Amplifier Separation

- Up to 500m (1640ft) using specified extension cable.

Cable Type Between Amplifier and Probe

- 4 conductor shielded twisted pair instrument cable
- Conductor size dependent on cable length
- BELDEN 3084A, DEKORON or equivalent
- Max: BELDEN 3084A = 500m (1640ft)
- Max: DEKORON IED183AA002 = 350m (1150ft).

Maximum Operating Pressure

- 10 BAR at 120°C.

Display (Remote version only)

- 2 line x 12 character alphanumeric LCD
- Backlight standard.

Memory - Remote

- Non-Volatile (No backup battery required)
- >10 years data retention.

Enclosure Sealing

- Integral Probe IP67
- Remote Electronics IP65 (NEMA 4x)
- Remote Probe IP67.

Cable Entries

BSP process mounting
- 2 x M20 glands

NPT process mounting
- 2 x 3/4" NPTF threaded adaptors

Remote
- 3 x 20mm (0.8"), 1 x 16mm (0.6") knock outs.

Mounting

- 1/2" NPT or BSP Thread
- 3/4" NPT or BSP Thread
- 1" NPT or BSP Thread
- 1.5" NPT or BSP Thread
- Flanged

Remote Test Input

- Press to test (used to check for malfunction of unit from remote position, PLC, SCADA etc).

Material	Dielectric Constant
Acetal	3.6
Acetic Acid	6.1
Acetone	17.7
Acetyl Acetone	23.1
Acetyl Bromide	16.5
Allyl Alcohol	21.0
Allyl Bromide	7.0
Allyl Choloride	8.2
Allyl Iodide	6.1
Ammonia	15.5
Amyl Alcohol	11.2
Amyl Bromide	6.3
Amyl Choloride	6.6
Amyl Ether	3.1
Amyl Iodide	6.9
Amyl Nitrate	9.1
Arsenic Tribromide	9.0
Arsenic Trichloride	12.4
Arsenic Triiodide	7.0
Asphalt	2.65
Benzene	2.3
Benzil	13.0
Benzoyl Chloride	22.1
Benzyl Alcohol	13.0
Benzyl Chloride	6.4
Boron Bromide	2.6
Bromine	3.1
Butane	1.4
Butyl Chloride	9.6
N Butyl Iodide	6.1
Iso Butyl Iodide	5.8
Cable Oil	2.2
Camphene	2.7
Carbon Dioxide	1.6
Carbon Disulphide	2.6
Carbon Tetrachloride	2.2

Material	Dielectric Constant
Castor Oil	2.6
Camphene	2.3
Cement	2.1
Chloracetic acid	12.3
Chlorine	2.0
Chloroform	5.5
Creosol	10.6
Cyclohexane	2.0
Deuterium	1.3
Deuterium Oxide	78.3
Dichloracetone	14.0
Dichlorobenzene	2.8
Dichloroethane	16.7
Diethyl Sulfide	7.2
Dimethyl Ethyl	11.7
Dimethyl Sulfide	6.3
Dimethyl Sulfate	55.0
Dowtherm	3.3
Ethanol	24.3
Ethyl Acetate	6.4
Ethyl Amyl Ether	4.0
Ethyl Benzene	2.5
Ethyl Benzoate	6.0
Ethyl Cyclobutane	1.9
Ethylene Chloride	10.5
Ethylene Cyanide	58.3
Ethylene Glycol	37.0
Ethylene Oxide	13.9
Ethyl Iodide	7.4
Ethyl Nitrate	19.7
Ethyl Silicate	4.1
Fly Ash	2.6
Formic Acid	58.5
Freon 12	2.4
Freon 11	3.1
Freon 113	2.6

Material	Dielectric Constant
Glycerine	47.0
Glycerol	43.0
Glycol	35.6
Heptane	1.9
Heptanoic Acid	2.5
Hexane	1.9
Hydrogen Bromide	3.8
Hydrogen Chloride	4.6
Hydrogen Cyanide	95.4
Hydrogen Fluoride	84.0
Hydrogen Iodide	2.9
Hydrogen Peroxide	84.2
Hydrogen Sulfide	5.8
Hydrazine	52.9
Iodine	118.0
Isobutyl Alcohol	18.7
Kerosene	1.8
Lead Oleate	3.2
Lonone	10.0
Menthol	3.95
Mesityl Oxide	15.4
Methanol	33.6
Methyl Alcohol	33.0
Methyl Ether	5.0
Methyl Ether Ketone	18.4
Mineral Oil	2.1
Nephthyl Ethyl Ether	3.2
Nitroethane	19.7
Nitromethane	39.4
Octane	1.96
Octyl Alcohol	3.4
Octylene	4.1
Oleic Acid	2.46
Oil, Oiive	3.1
Oil, Peanut	2.2
Oil, Transformer	2.2

Material	Dielectric Constant
Palmitic Acid	2.3
Pentane	1.8
Phenol	9.9
Phenol Acetate	6.9
Phosgene	4.7
Phosphorus	4.1
Polyethylene chips	1.3
Polyethylene powder	1.4
Propyl Acetate	6.3
Propyl Alcohol	21.8
Propyl Benezene	2.4
Pyridine	12.5
Reburned Lime	2.2
Sand (Dry)	4.8
Sodium Chloride	6.1
Sodium Oleate	2.7
Succinic Acid	2.4
Sodium Chloride	6.1
Sulphur	3.4
Sulphur Dioxide	17.6
Sulfuryl Chloride	10.0
Sulphur Trioxide	3.6
Teflon Powder	1.3
Teterabromiethane	7.1
Thionyl Bromide	9.1
Thionyl Chloride	9.3
Titanium Tetrachloride	2.8
Toluene	2.4
Trichloroxoluene	6.9
Trimetylbenzene	2.2
Trimethyl Borate	8.2
Urethane	3.2
Valeric Acid	2.6
Vinyl Ether	3.9
Water	80.0
Xylene	2.4

HAWK, Since 1988

Hawk Measurement Systems Pty Ltd (HAWK) was established in 1988. It's founding members saw the universal requirement of various industries requiring improved process control and efficiency in their operations.

We Can Help

HAWK understands the difficulties customers face when seeking accurate level measurement. Every application is different, involving a multitude of environmental factors. This is where HAWK excels. Our aim is to ensure that customers feel comfortable with our technology, and are provided with long term and reliable solutions. We believe that a combination of application and product expertise, as well as forward thinking and proactive support policies are the foundation of successful customer-supplier relationships.

Progressive Technical Support

HAWK believes that the future of the Level Measurement Industry revolves around the quality of pre and post sales - support. Our aim is for all sales & support staff to be product experts, and more importantly application experts making our customers applications as efficient and consistent as possible.

Remote Innovation

HAWK understands the need for immediate technical assistance.

The HAWKLink 4G communication device allows any computer with internet access and our free GosHawk diagnostic & calibration software; to dial in, calibrate, test, and check the performance of HAWK products. This innovative system allows our Global Support Team to assist with commissioning and after sales service of HAWK equipment worldwide. Measurement problems are addressed as they happen; not days or weeks later.

Knowledge Sharing

HAWK believes that knowledge sharing is key to creating long term relationships. Empowering our customers and our worldwide distribution network, whilst being available at all times to lend a helping hand, is the perfect recipe for long term solutions and relationships. HAWK openly extends an invitation to share our 30 plus years of level measurement experience, and ensure that your day to day processes are efficient, understood, and always working.

All company or product names are registered trademarks or trademarks of their respective owners.

Hawk Measurement Systems
(Head Office)
15 - 17 Maurice Court
Nunawading VIC 3131, AUSTRALIA
Phone: +61 3 9873 4750
Fax: +61 3 9873 4538
info@hawk.com.au

Hawk Measurement
5010 Gateway Drive, Medina,
OH 44256, USA
Phone: +1 888 HAWKLEVEL (1-888-429-5538)
Phone: +1 978 304 3000 / +1 877-356-5463
Fax: +1 978 304 1462 / +1 330-331-7172
info@hawkmeasurement.com

For more information and global representatives: **www.hawkmeasurement.com**

DOC-ADMITTANCE-MAN
Rev. 1.17 0322