A Higher Level of Performance

Manual

Gladiator

Acoustic Switch

Non-contact Self Cleaning Blocked Chute Detection



For more information, please visit >

www.hawkmeasurement.com

Software v7.46 onwards

Contents

Overview 3
Principle of Operation 3
Typical Uses 3
Function 3
Features 3
System Components 4
Dimensions 5
Gladiator Remote Amplifier 5
AWRT-JB Junction Box 5
Remote Transducer 6
Mounting Flange 6
Remote Transducer with Spray Cleaner 6
Wiring 7
Gladiator Remote Amplifier 7
AWRT-JB Junction Box 7
Transducer Cable Extension 8
Mounting Dimensions & Instructions 9
Remote Transducer 9
Remote Transducer with Spray Cleaner 9
System Overview 10
GAWC-SYS1 Acoustic Cleaner Components 10
GAWC-SYS2 Acoustic Cleaner Components 11
Mounting Dimensions & Instructions 12
Application Examples 12
User Interface 13
Facia Controls 13
Power Up Sequence 14
Powering The System For The First Time 14
Commissioning 15
Blocked Chute Applications 15
Level Switch Applications 16
Software 17
Displayed Diagnostics 17
Main Menus 18
Quickset Menu 18
App Types 19
App Types 20
Advanced Menu 21
Relay 2 Functions 22
Relay 2 Functions 22
Gain Based Maintenance / Spray Cleaner Setup Examples 23
Time Based Spray Cleaner Setup Example 23
Transducer Initialization 24
Troubleshooting 25
Error Codes 25
Software Flow Chart 26
Part Numbering 30
Remote Amplifier 30
Remote Transducer 30
Junction Box 30
Extra Cable 30
Mounting Flange 30
Part Numbering / Specifications 31
Cleaning System (GAWC-SYS1) 31
Cleaning System Mounting Flange 31
Spray Cleaner Specifications 31
Solenoid coil MD-2-24VDC-PC - #549903 31
Cleaning System (GAWC-SYS2) 31
Specifications 32

Principle of Operation

The Gladiator Acoustic Switch uses Acoustic Wave technology in a new Sender / Receiver form for blocked chute detection and anti collision for heavy machinery. The Gladiator Amplifier powers two Transducers which use special HAWK developed software where both units pulse & receive each others Acoustic echoes. When the path between the Transducers is blocked the units immediately detect the presence/absence change of the return signal and trigger a communications relay for indication or control purposes.

HAWK's Acoustic Wave Transducers are **self cleaning**. The Acoustic Switch is designed for continuous operation in dusty, wet environments where other technologies fail. The power of each pulse (pressure wave) blows the water, moisture & build-up off the face of the diaphragm.

Typical Uses

- Blocked chute detection in wet or dry environments
- Wet screen blocked chute detection
- Nucleonic / tilt switch replacement
- Hi level alarm / Low level alarm
- Truck/machine detection (ROM bins, Primary Crusher Dump Pockets)
- Sewage sludge handling

Function

Detection of objects or material between two points. Can be used for blockage detection, barrier detection, machine detection / protection and point level detection.

Features

- No contact with the product required
- Self cleaning Transducers
- Heavy duty titanium version available
- Designed for dusty, wet environments
- LCD setup/diagnostics on remote amplifier
- Blocked chute ranges up to 15 meters (50 ft)
- Simple '1-minute' setup
- 2 Relay outputs
- Remote test function
- Adjustable ON and OFF delays
- Communication options: GosHawk, Modbus, HART, Profibus DP, DeviceNet
- Remote GSM connection option & support
- Remote Amplifier to Transducer separation up to 500 meters (1640 ft)

System Components

Gladiator Remote Amplifier



Junction Box

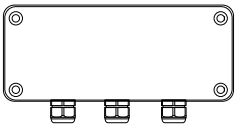

Acoustic Switch 15kHz Remote Transducers with UHMW sleeve and Flange

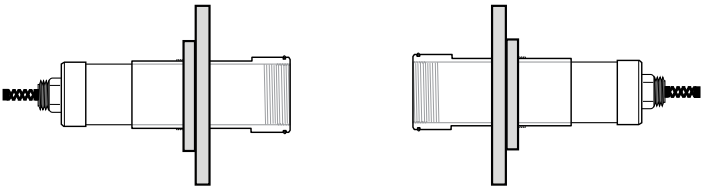

or

Acoustic Switch 15kHz Remote Transducers with Spray Sleeve and Flange

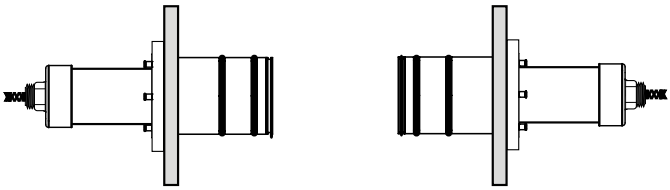

Gladiator Remote Amplifier

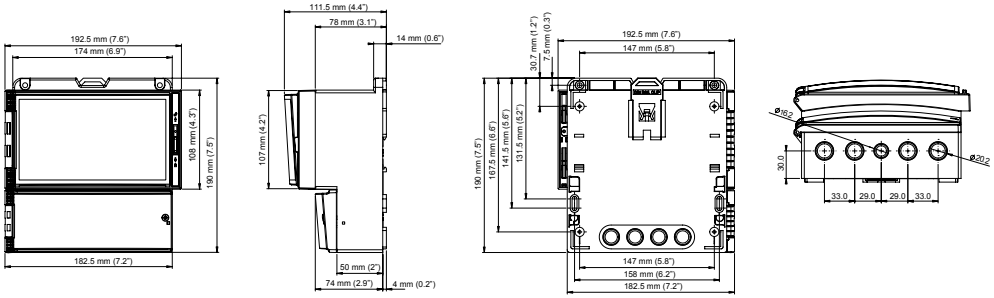

AWRT-JB Junction Box

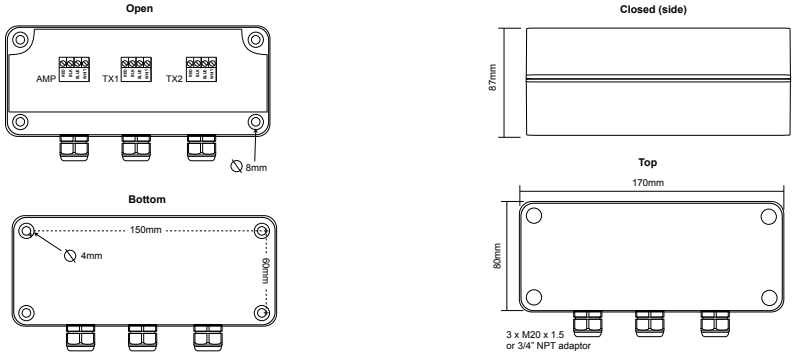

Remote Transducer

With GAWSLV-3-X and FA4A-4 Flange

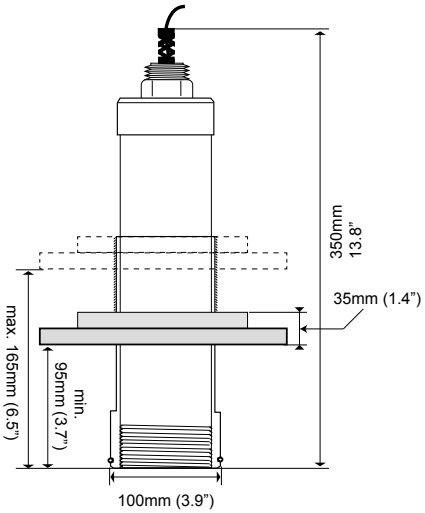

Remote Transducer with Spray Cleaner

With FA4A-4-ASC Flange

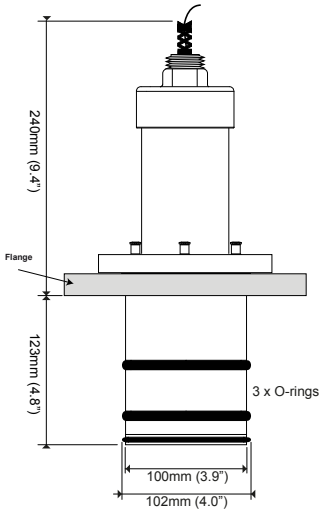

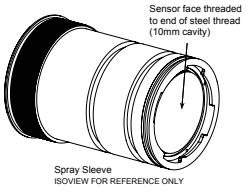

Mounting Flange

STANDARD 4" ANSI FLANGE DIMENSIONS

SIZE	FLANGE TYPE	A (PCD) mm	A (PCD) in.	B (OD) mm	B (OD) in.	C (Hole) mm	C (Hole) in.	No. Holes
4"	FA4	190.5	7.5	228	9.0	19	0.75	8

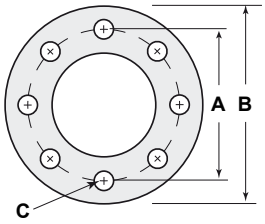

Gladiator Remote Amplifier

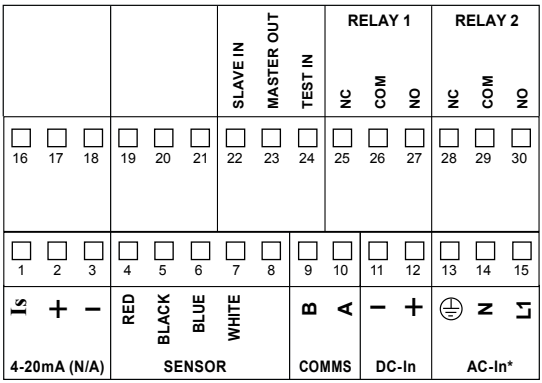

Solenoid wiring for Spray Cleaner

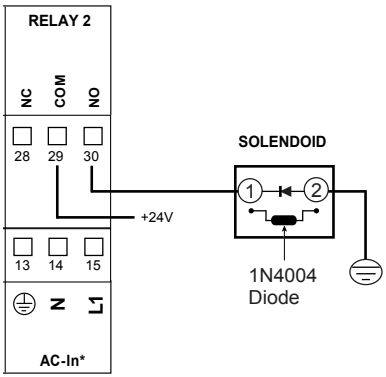

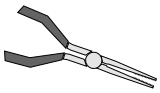

Use long nose pliers to extract terminals

Relay 1 - Output Relay
Relay 2 - FailSafe Relay

*AC-In is replaced by 36-60VDC with Power Input Option 'C'.

AWRT-JB Junction Box

Connect colour to colour

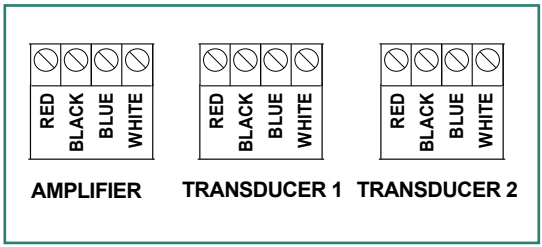

Transducer Cable Extension

Cable extension should only be the single cable run between AWRT-JB Junction Box 'Amplifier' terminal and the Remote Gladiator Amplifier.

Cable length between Transducer and AWRT-JB HAWK Junction must never exceed 30m.

AWRT-JB Junction Box

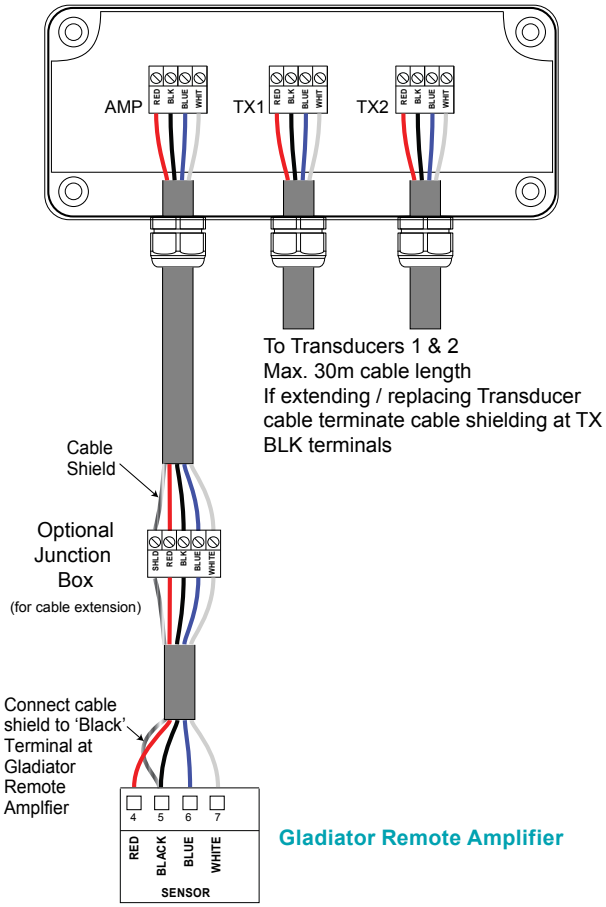

Gladiator Remote Amplifier

Remote Transducer

With GAWSLV-3-X and FA4A-4 Flange

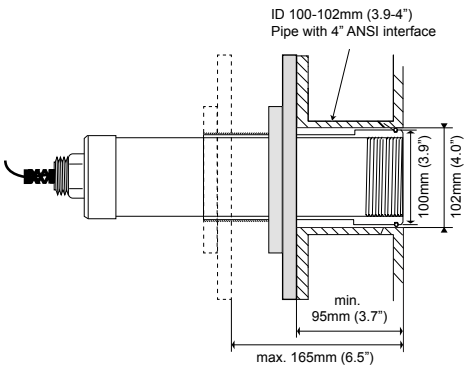

Adjustable Flange Range

Remote Transducer with Spray Cleaner

With FA4A-4-ASC Flange

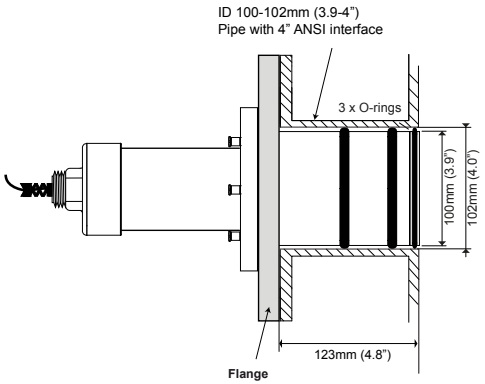

General Mounting Instructions

- The mounting location must be away from the material flow path.
- Sleeve face should be flush with vessel wall interior
- O-rings form both a steal and act as acoustic de-coupling with the vessel. If required use a cavity filler (such as a silicone) to prevent material ingress around the sleeve.
- Material ingress between the sleeve and mounting can create acoustic coupling which can reduce sensor performance
- If there is potential for sensor face wear, the titanium version must be used
- If there is potential for high volume rock impact, consider a protective hood above (not in front of) sensor face location.
- Avoid mounting close to perpendicular walls where material build up can bridge to the Transducers.
- Avoid mounting close to perpendicular walls where material build up can bridge to the Transducers.
- Transducers should be aligned as accurately as possible for optimum performance.
- Never use the connection cable to carry or extract the Transducer

Spray Kit Mounting Instructions

- Solenoid and 4 way pipe converter should be mounted securely.
- Recommend 4 way pipe converter is kept close to mounting position on transducer - use 1" single pipe for as much distance as possible.
- Use a converter if required to interface with 1" HAWK recommended pipe connection.

Minimum Range

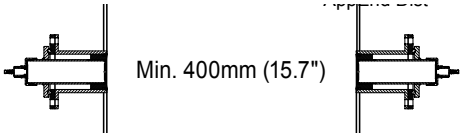

GAWC-SYS1 Acoustic Cleaner Components

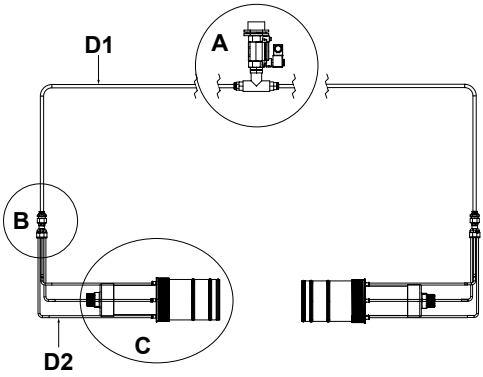

Note: Full cleaner package **GAWC-SYS1** includes all converters, reducers, connecters, 30m of 12mm tube, 20m of 6mm tube, solenoid and FA4A-4-ASC flanges. It does not include other eletronics (transducers, amplifier, junction box).

	Part Description	Part Number
A	Solenoid	GAWC-SL
B	0.5" to 4 x 1/4" connecter	GAWC-4P
C1 C2	Hawk Transducer Cleaner Sub-assembly	AWRT15_____AS* GAWC-X
D1	Ø 12mm tube Supplied in single piece Total length = distance of part A to part B x 2 (one length per transducer)	GAWC-12MMLz
D2	Ø 6mm tube Supplied in single piece Total length = distance of part B to part C x 8 (Four equal lengths per transducer)	GAWC-06MMLz

z = Specify length in metres

*Consult Acoustic Switch datasheet for full transducer part numbering

Detail A

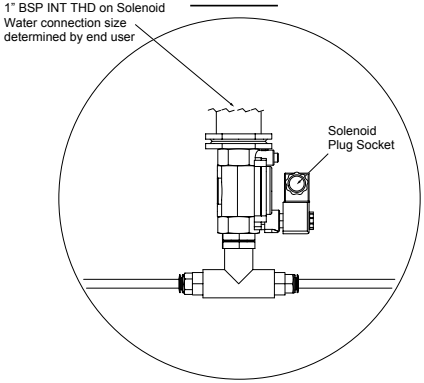

Detail B

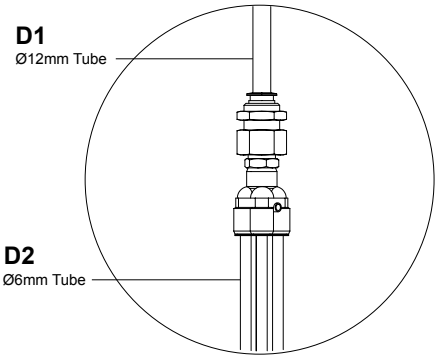

Detail C

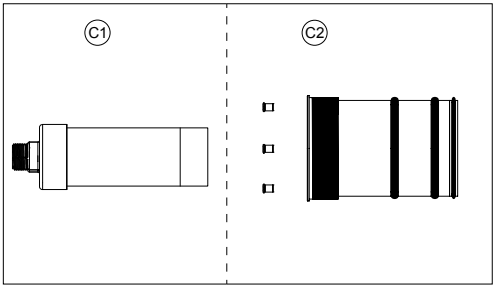

Max. water pressure 6bar (600kpa)
Min. water pressure 1bar (100kpa)

Wiring Diagram for Solenoid Plug Socket
1N4004 Diode

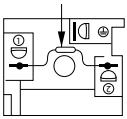

GAWC-SYS2 Acoustic Cleaner Components

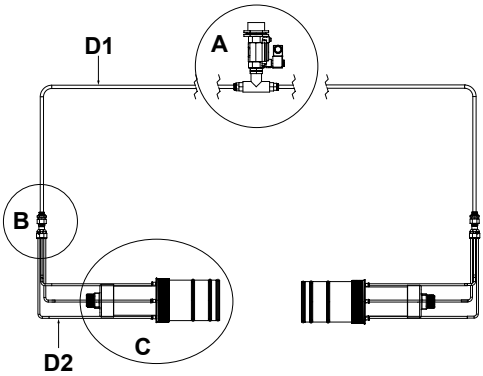

Note: Full cleaner package **GAWC-SYS2** includes all converters, reducers, connecters, 30m of 12mm tube, 20m of 6mm tube, solenoid and FA4A-4-ASC flanges. It does not include other eletronics (transducers, amplifier, junction box).

	Part Description	Part Number
A	Heavy Duty Burkett Valve & Solenoid	GAWC-SL2
B	0.5" to 4 x 1/4" connecter	GAWC-4P
C1 C2	Hawk Transducer Cleaner Sub-assembly	AWRT15_____AS GAWC-X
D1	Ø 12mm tube Supplied in single piece Total length = distance of part A to part B x 2 (one length per transducer)	GAWC-12MMLz
D2	Ø 6mm tube Supplied in single piece Total length = distance of part B to part C x 8 (Four equal lengths per transducer)	GAWC-06MMLz

z = Specify length in metres

Detail A

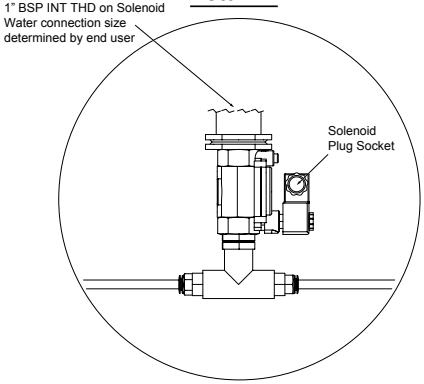

Detail B

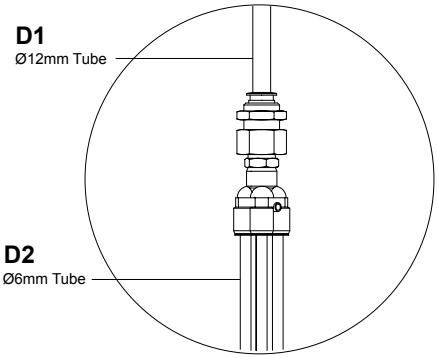

Detail C

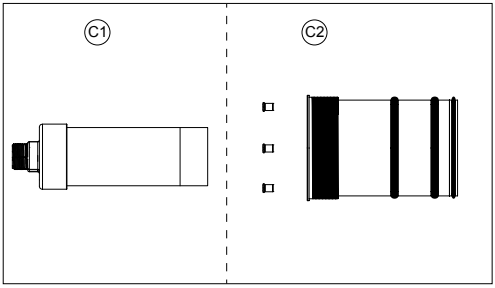

Max. water pressure 16bar (1600kpa)
Min. water pressure 1bar (100kpa)

Wiring Diagram for Solenoid Plug Socket
1N4004 Diode

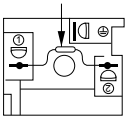

Application Examples

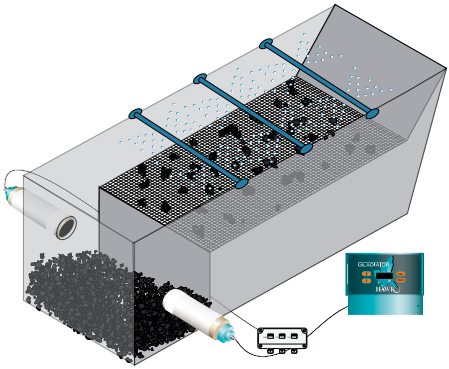

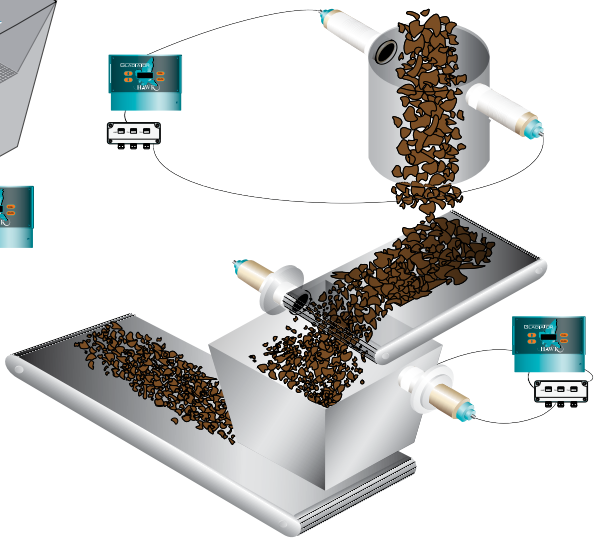

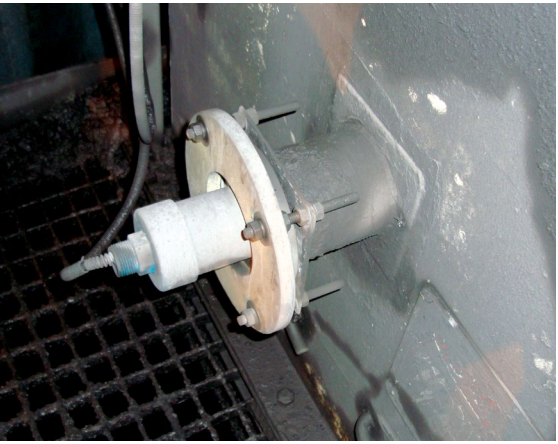

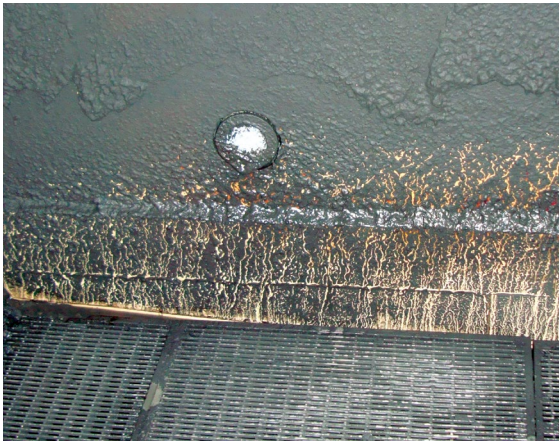

Facia Controls

Gladiator Amplifier

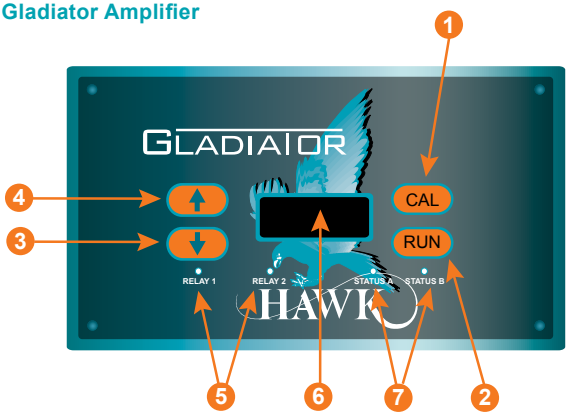

1. Calibrate button
2. Run button
3. Down button
4. Up button
5. Relay LEDs 1 and 2
6. Display (LCD with backlight)
7. Status LEDs A and B
   Status A blinking indicates units are pulsing correctly.
   Status B is not used

All software adjustments can be made by the push buttons on the amplifier facia.

CAL

In Run Mode
(A) Press and hold - interrupts normal operations and allows access to software menu headings.

In Calibrate Mode
(B) Steps into a menu selection to allow editing (down one level)
(C) Saves selected value and moves onto the next menu item.

RUN

In Run Mode
(A) Hides diagnostics if they are in view and returns to the standard running display.

In Calibrate Mode
(B) Steps out of a menu or selection (up one level). Parameter value will be stored automatically when stepping up.
(C) Returns to running mode from the top level menu.

In Run Mode
(A) Scrolls through operating diagnostics on display LCD.

In Calibrate Mode
(B) Scrolls through software parameters when browsing the menus.
(C) Changes display value when editing a parameter.

Powering The System For The First Time

Upon power up the system scrolls through system information including software revisions, model types, serial numbers and device ID.

The first power up of an entirely new system will require Transducer Initialization.
See 'Transducer Initialization ' section for details.

After this sequence is complete the unit will begin pulsing and display Sensor Value% on the display.

The system is now ready for Commissioning.

Blocked Chute Applications

- Ensure system is mounted as suggested (see Mounting Dimensions & Instructions)
- Check where the actual level or target is relative to the sensors. Make sure that the material is not blocking the path between the Transducers.

Parameter	Instruction
1. Set App Type	The system comes pre-set to Blocked Chute. To configure re-select the App Type. You will be prompted to 'Re-Configure', Select 'Yes'.
2. Set Mode	Advanced or Standard. Advanced is recommended for Blocked Chute applications.
3. Set ChuteWidth	You will be prompted to enter the width of the chute (this should also be the distance between each Transducer face). An accurate value is critical to system performance.
4. Set Back Chute Cutoff	The default Back Chute Cutoff Distance is +350mm (13.7") of the ChuteWidth value. This parameter allows for additional refections to be accepted as a good reading by the system.
6. Set Switch Point%	Set the Sensor Value% the unit must pass before triggering Relay 1. The Default value is acceptable for most applications. It can be increased to provide stability in difficult applications.
7. Set Relay Delay Timer	Set the On and Off Delay timers for Relay 1.
8. RUN System	Press RUN several times to commence unit operation.

Level Switch Applications

- Ensure system is mounted as suggested (see Mounting Dimensions & Instructions)
- Check where the actual level or target is relative to the sensors. Make sure that the material is not blocking the path between the Transducers.

Parameter	Instruction
1. Set App Type	Set App Type to 'Switch'.
2. Set Mode	Advanced or Standard. Advanced is recommended for Level Switch applications.
2. Set Application Width	Set Start Distance and End Distance. This span should encompass the distance to the opposing Transducer.
3. Set Sensitivity%	For simple / clean applications, set the unit to a high Sensitivity% value. For difficult / dirty applications, set a low Sensitivity% value.
4. Set Switch Point%	Set the Sensor Value% the unit must pass before triggering Relay 1. The Default value is acceptable for most applications. It can be increased to provide stability in difficult applications.
4.Set Relay Delay Timer	Set the On and Off Delay timers for Relay 1.
5. RUN System	Press RUN several times to commence unit operation.

Displayed Diagnostics

Use the ⬆ ⬇ buttons to cycle through Diagnostics on the top line of the Display.
The bottom line will always show the Sensor Value%

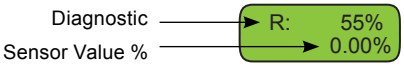

Note: Diagnostics with 1 at the end indicate Transducer 1, and 2 indicates Transducer 2.

Diagnostic	Description
Sensor Value	Default Display. 2nd Line indicates actual % value.
Sensor	Will display 1 or 2.for Transducer 1 or 2. Press UP and DOWN buttons at the same time to cycle between each Transducer.
E Distance	Displays pulse by pulse echo distance. This may be space between sensors or Acoustic Modulated Tracking distance depending on application conditions.
Signa1	Echo Signal Size in Volts. This value corresponds to the Sensor Value. 2V+ is good signal (Sensor Value of 0%). 1V is half signal (Sensor Value 50%) and 0V is no signal (Sensor Value 99-100%).
Recov1	Recover Gain applied. Recover Gain is used to retain incoming Echoes. It is normal for this value to fluctuate rapidly.
Noise1	Acoustic Noise detected. Enclosed spaces will have residual acoustics present. It is normal to have a constant and fluctuating Noise% value.
Gain1	Total amount of Gain used by the system (includes Recover). It is normal for this value to fluctuate rapidly.
Signal	Average Echo Signal size between both Transducers (see Signal above for more information).
Normal Failed Recover	Unit operating normally Unit in failsafe conditions Unit searching for level / attempting to amplify signal.
Temperature	Ambient temperature at Transducer.
Delay	Relay 1 Delay timer. It is normal for this value to fluctuate rapidly.
Min	Lowest recorded Sensor Value%.
Max	Highest recorded Sensor Value%.
SW on	Relay 1 Sensor Value switch on%.
SW off	Relay 1 Sensor Value switch off%.

Main Menus

All units are programmed by default with Unlock Code 0 (zero). This can be adjusted in the Advanced menu.

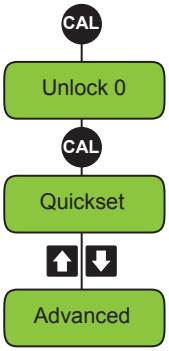

Quickset Menu

Parameter	Description	Options
App Type	See 'Programming App Types' on next page for detailed information.	• Blocked Chute • Switch
Switch Point	Set Relay 1 trigger Sensor Value%. Default is 75%. When the Sensor Value exceeds this % the unit will commence the delay timer and then switches Relay 1.	• 1-99%
On Delay	Relay 1 on delay timer.	• Adjustable in seconds
Off Delay	Relay 1 off delay timer.	• Adjustable in seconds
Relay1 Action	Set default Relay 1 status. Failsafe High is Energized (EN) during normal operations and De-energized (DEN) when switches. Failsafe Low is De-energized (DEN) during normal conditions and Energized (EN) when switched.	• Failsafe High • Failsafe Low
Lock Code	Adjust system Unlock code. Default is 0.	0-200

App Types

Blocked Chute

• Configures the unit for typical blocked chute applications

• There are two selectable modes for Blocked Chute configuration. **Advanced** and **Standard**.

Parameter	Description	Options
Recalculate AppParams?	Confirm Yes or No to adjust Application Parameters.	Yes / No
Advanced / Standard	**Advanced** is a new mode which utilizes two signal control modes to maximize system reliability. It monitors incoming signal strength of Echo Distance and Acoustic Modulation. **Standard** mode monitors only the Echo Distance signal based measurement (as per previous generation of Acoustic Switch software).	Advanced / Standard
ChuteWidth	Program to the distance between each Transducer face. This value must be accurate for best system performance.	Adjustable
BackChute	Allows for additional reflections from material / obstacles to be accepted as good signal. Default +350mm (13.7") of ChuteWidth.	Adjustable

App Types

Switch

- Configures the unit for typical level switch applications and Chute applications where Blocked Chute mode is too resilient (eg for light materials or narrow chutes) .
- There are two selectable modes for Blocked Chute configuration. **Advanced** and **Standard**.

Parameter	Description	Options
Recalculate AppParams?	Confirm Yes or No to adjust Application Parameters.	Yes / No
Advanced / Standard	**Advanced** is a new mode which utilizes two signal control modes to maximize system reliability. It monitors incoming signal strength of Echo Distance and Acoustic Modulation. **Standard** mode monitors only the Echo Distance signal based measurement (as per previous generation of Acoustic Switch software).	Advanced / Standard
Start Dist	Set Start of Echo Filter Window distance. Typical setup for Start distance should be either equal to or slightly less than the distance between the Transducers.	Adjustable
End Dist	Set End of Echo Filter Window distance. Typical setup for End distance should be Start Distance +350mm (11.8").	Adjustable
Sensitivity	Set Sensitivity to media. A high value will make the unit more sensitive to switching and responding to lighter materials. A low value is suitable for most switch applications and will make the unit more resilient to false switching.	1-99%

Advanced Menu

Parameter	Description	Options
Switch Mode	Adjust Relay 1 Switch Mode from Auto to Manual. Manual Mode allows manual adjustment of both Switch on and Switch Off%.	Adjustable in %
Relay2Action	Set Relay 2 Action. See '**Relay 2 Functions**' for details.	
View Log	View Sensor Value% recorded max / min values.	Yes / No
Reset Log	Clear Sensor Value% log.	Yes / No
Comms Type	Adjust Communications Settings (Modbus only functional).	Device ID Baud Rate
Backlight	Activate / De-activate Display Backlight.	On / Off
ProbeAVG	ProbeAVG is similar to a Damping type setting where the Sensor Value% can be averaged out over multiple pulses. Increasing this will give a more stable Sensor Value% reading.	Adjustable
Initialize TX	Run Transducer ID Initialize Process. See '**Initialize Tx**' section for details.	
Empty Dist	Empty Distance can be used to eliminate long range false echoes. This parameter is not used by the 'Advanced' App Type modes.	Adjustable
Load Defaults	Load default parameters for Amplifier followed by optional of Transducer 1 & 2.	Yes / No
InputVoltCheck	Activate VinChk to trigger Failsafe condition if input voltage is too low.	On / Off

Relay 2 Functions

Relay 2 has several functions available to support the system & installation.

Parameter	Description
Failsafe	Relay 2 is triggered in the event of a Failsafe condition. This includes insufficient input voltage, missing / faulted Transducers, Corrupt communications between Transducer / Amplifier and other general hardware faults.
Relay2	Mirrors Relay 1 functionality as level switch / alarm.
Maintenance Alarm	Relay 2 will be triggered when the Transducers Gain% value exceeds the programmed value **CleanGainHigh%**. Relay 2 will de-activate when Transducer Gain% alls below the programmed **CleanGainLow%.** Transducers using higher Gain% over time indicates that less signal is being received and is a symptom of build up within the chute.
GainOptClean	Gain based Cleaning function triggers Relay 2 to activate the Acoustic Spray Cleaner. When the Transducer Gain% exceeds the programmed **CleanGainHigh%** value Relay 2 is triggered for the duration of 1/2 of the Relay 1 **On Delay** timer. It will repeat the spray at the **Clean Timer** interval until the Transducer Gain% falls below the programmed **CleanGainLow%** value. Transducers using higher Gain% over time indicates that less signal is being received and is a symptom of build up within the chute.
TimeOptClean	Time based Cleaning function triggers Relay 2 to activate the Acoustic Spray Cleaner. Relay 2 is triggered for the duration of 1/2 of the Relay 1 **On Delay** timer and will repeat at the selected interval for the selected duration.

Gain Based Maintenance / Spray Cleaner Setup Examples

The Gain based trigger averages the total used Gain of both transducers to activate and de-activate Relay 2. The system uses Gain to amplify the incoming signal.

The live Gain% value is accessible as a Diagnostic on the display. Press the UP or DOWN arrow until it is displayed on the top line:



When the system begins to use higher than normal Gain% this is an indication of potential problems within the application, most often material build up in the chute. High volumes of build up increase the risk of a blocked chute event.

Both modes use CleanGainHigh% to Activate Relay 2, and CleanGainLow% to de-activate Relay 2.

Setup Example - Maintenance Check Mode

- Under Relay 2, select 'Maint'ce Chk', program CleanGainHigh% to 80% and then CleanGainLow% to 60%. The unit will switch Relay 2 when total **Gain%** is greater than 80%. The operator can examine the chute in this condition and take suitable action. The system will un-switch when Gain% returns below 60%.

Setup Example - Gain Option Cleaning Mode

- In 'Quickset' Set 'On Delay' to 4.0 seconds - this will provide a 2.0 second water blast.
- In 'Advanced' set 'Relay2Action to 'GainOptCln' with a 'CleanGainHi' of 80%, 'CleanGainLo' of 70% and 'Clean Timer' to 5.0min.
- This will trigger the water spray for 2 seconds when Gain goes above 80%.
- The spray will repeat every 5 minutes until Gain goes below 70%.
- You can view Gain while the unit is running by using the arrow key to locate the diagnostic display.

Time Based Spray Cleaner Setup Example

The Time based trigger activates Relay 2 at every Clean Time interval for duration of 1/2 of the Relay 1 On Delay time.

Setup Example - Time Option Cleaning Mode

- In 'Quickset' Set 'On Delay' to 4.0 seconds - this will provide a 2.0 second water blast.
- In 'Advanced' set 'Relay2Action to 'TimeOptCln' with a 'Clean Timer' to 60min.
- The water spray will trigger every 60 minutes for a total of 2 seconds.

Error 01 - Error 11

- If the LCD is displaying ‘Error 01 or Error 11 after installing a single transducer or full system you may need to re-initialize a transducer.
- If your system is displaying Error 01 or Error 11 after the system has been working correctly it is possible there is a hardware problem.
- If Comm Err is displayed while navigating menus check your wiring, terminals, junction boxes and transducers for damage or connection problems.

Initializing a Transducer

- If you need to re-initialize the transducer address you can run this program.
- You will have the option to clear each & initialize transducer address.
- First - **Disconnect Transducer 2**
- Press and hold CAL to force the unit to open the ‘unlock’ menu.
- Navigate to the Initialize TX menu as per below:

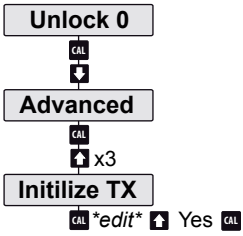

After selecting ‘Yes’, you will see one of these messages:

T’ducer1 Initialize?	**Plz connect Transducer 1**	**T’ducer 1 Ready**

During the boot sequence of the amplifier information about each transducer is cycled on the LCD. Each transducer will pulse once during this phase confirming power is present.

If both transducers pulse at the same time they have been assigned the same TX ID. You will need to re-initialize one of them.

T’ducer1 Initialize?

- Transducer 1 is detected and has not been initialized.
- Press CAL to edit, press UP until you see ‘Yes’.
- Press CAL to select.
- Re-connect Transducer 2 and press RUN several times to re-activate the unit.

T’ducer 1 Ready

- Press CAL to edit, press UP twice to display ‘Clear? Yes’.
- Press CAL.
- The unit will cycle to T’ducer 2 displaying ‘Ready’.
- Re-connect Transducer 2 and press RUN several times to re-activate the unit.

Plz connect Transducer 1

- Press RUN firmly until it moves to 2nd Transducer.
- Display should read ‘T’ducer 2 Ready’ (if this does not occur, skip to below note).
- Press CAL to edit, press UP twice to display ‘Clear? Yes’. Press CAL.
- The unit will not have returned to the advanced menu.
- Press UP and re-enter TX initialize.
- You should now be prompted with T’ducer1 Initialize, refer to relevant steps.

***Note*:**

- If the unit menu does not scroll to ‘T’ducer 2 Ready’ you will need to perform a ‘Load Defaults’ routine (located in Advanced Menu). This will prompt you to load defaults and confirm selection followed by resetting the sensor - do not reset the sensors.
- After the load default press RUN to re-start the unit. Next, perform a power cycle of the entire system.
- When prompted to connect Wire Tx 1, Press CAL. When prompted to connect Transducer 1, press RUN.
- ‘T’ducer 2 Ready’ should now be displayed. Press UP arrow to display ‘Clear’. Press CAL. The unit will now re-start.
- Follow on-screen instructions to complete setup.

Error Codes

Too Many Transducers

- This code can be displayed if both transducers are already **correctly** initialized when run the Initialize TX program. Press and hold the RUN button to exit this code loop.

Com Retry

- Unit is attempting to communicate with a transducer.

Failed

- Unit has failed to communicate with both transducers.
- Check amplifier & junction box wiring connections.
- Pull each wire to ensure they are locked in correctly.

Error No 01:

- Amplifier cannot communicate with transducer 1.

Error No 11:

- Amplifier cannot communicate with transducer 2.

Existing installation

- For both error codes 1 and 11 the first thing to check is the amplifier & junction box wiring connections, both HAWK and customer supplied if applicable.
- Pull each wire to ensure they are locked in correctly.
- Check sensor for damage.

New installations

- You may need to re-initialize the transducers.
- The re-initialization sequence assigns each an ID which the amplifier is looking to communicate with.
- The re-initialize program is in the 'Advanced' Menu.
- While an error code is on the screen you will need to push and firmly hold the CAL button to access the unlock screen. This may take 5-10 seconds.

Error 02:

- Amplifier can talk to transducer but transducer gives incorrect response.
- This can indicate a communication data corruption between Amplifier and Transducer.
- It can be a result of noise in data lines or one of data lines (blue or white) being open circuit.

Error 03:

- A communications option in output adjustment has been selected (eg Profibus, FF) but the module is not present, connected or responding.

Error 04:

- Amplifier is programmed with incorrect software.

Error 08:

- Incorrect transducer - ensure connected transducer is Acoustic Switch (AS).

Power Supply

- LCD / LEDs / Relays dimming or dropping out in non-blocked conditions.
- The GSASUS when powered by AC will output a DC voltage from the DC +/- terminals.
- You should read approx 16V stable from DC +/- while under AC power. If your AC power is stable and the DC is outputting a lower or unstable value there is likely a problem with the internal AC power supply.
- You can use a 24DC regulator and power the unit via DC terminals.
- **High / Inconsistence switch % after calibration.**
- See 'setting maximum range'.

Diagnostics

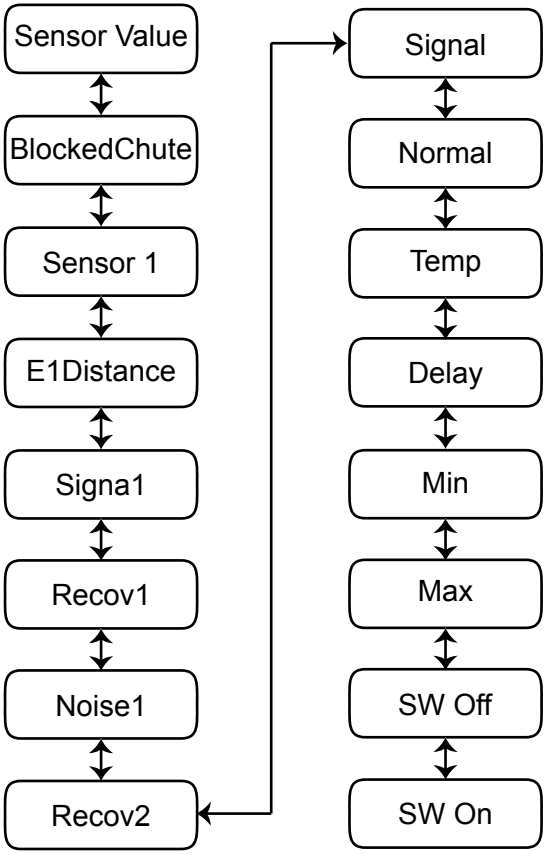

QuickSet

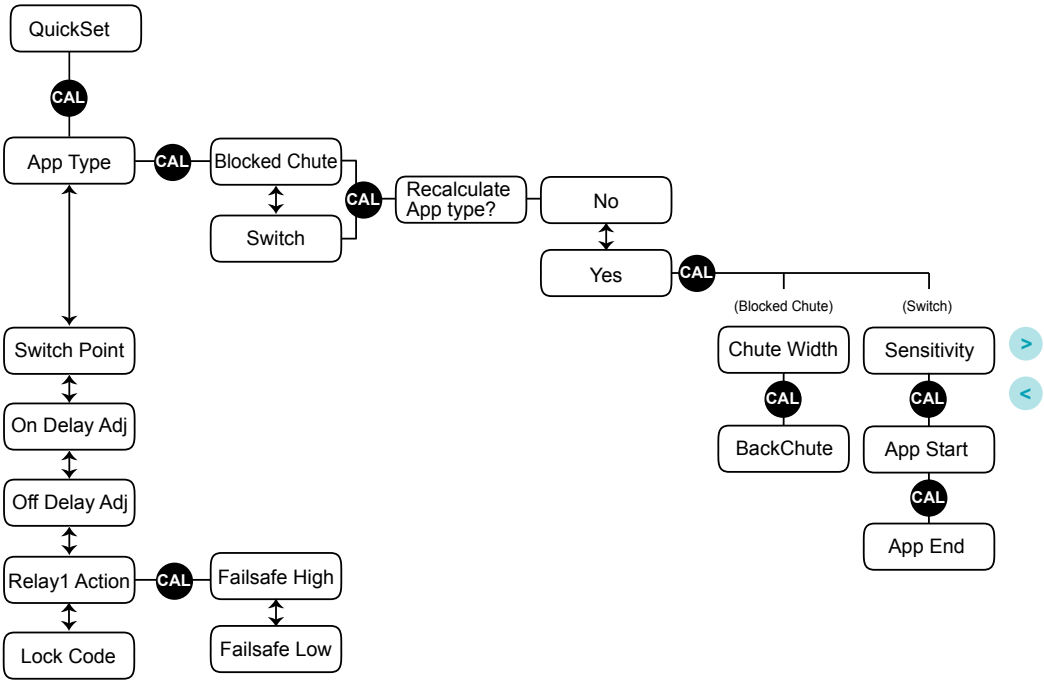
QuickSet
CAL
App Type
CAL
Blocked Chute
Switch
CAL
Recalculate App type?
No
Yes
CAL
(Blocked Chute)
(Switch)
Chute Width
Sensitivity
CAL
CAL
BackChute
App Start
CAL
App End
Switch Point
On Delay Adj
Off Delay Adj
Relay1 Action
CAL
Failsafe High
Failsafe Low
Lock Code

Advanced

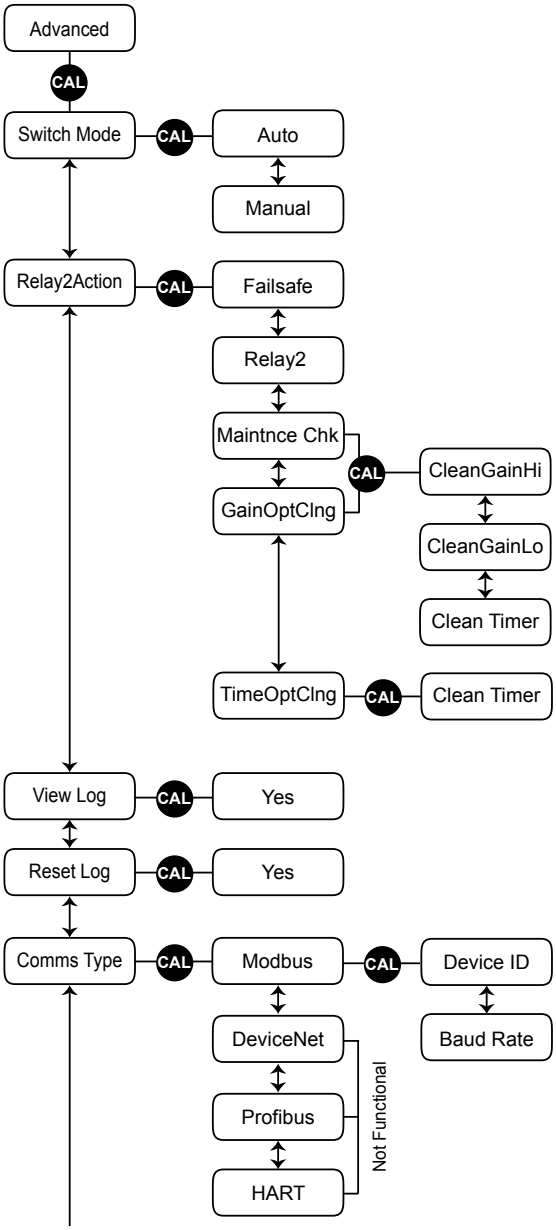
Advanced
CAL
Switch Mode
CAL
Auto
Manual
Relay2Action
CAL
Failsafe
Relay2
Maintnce Chk
CAL
CleanGainHi
GainOptClng
CleanGainLo
Clean Timer
TimeOptClng
CAL
Clean Timer
View Log
CAL
Yes
Reset Log
CAL
Yes
Comms Type
CAL
Modbus
CAL
Device ID
DeviceNet
Baud Rate
Profibus
HART
Not Functional

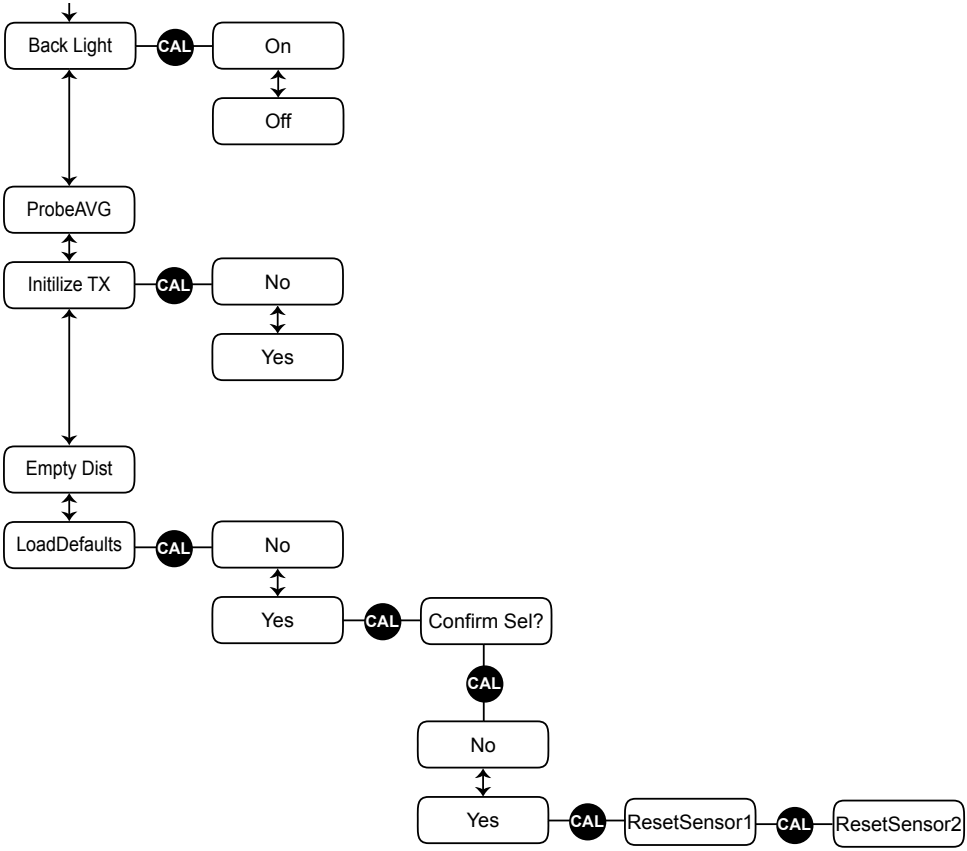
Back Light
CAL
On
Off
ProbeAVG
Initilize TX
CAL
No
Yes
Empty Dist
LoadDefaults
CAL
No
Yes
CAL
Confirm Sel?
CAL
No
Yes
CAL
ResetSensor1
CAL
ResetSensor2

Remote Amplifier

GSA Gladiator Amplifier, Modbus

Housing
S Polycarbonate

Power Supply
B 12-30VDC
C 36-60VDC
U 12-30VDC and 90-260VAC

Output Options
S 2 x SPDT Relays
X 2 x SPDT Relays & 4-20mA output
E 2 x SPDT Relays & Modbus Over Ethernet
R 2 x SPDT Relays & Modbus Over Wi-Fi
E 2 x SPDT Relays & Modbus Over Bluetooth

Approval
A22 ATEX Grp II Cat 3 GD
T85°C IP67 Tamb -40°C to 70°C

GSA	S	U	S

Junction Box

AWRT-JB-01	HAWK multi purpose junction box for dual transducer applications
AWRT-JB-06	HAWK multi purpose junction box for dual transducer applications with 6m cable

Extra Cable

CA-TXCC-R-C15	15m (49ft 2.5")
CA-TXCC-R-C30	30m (94ft 5.1")
CA-TXCC-R-C50	50m (164ft 0.5")
CA-TXCC-R-C100	100m (328ft 1")

Mounting Flange

FA4A-4	HAWK 4" ANSI flange with decoupled connection flange for acoustic switch sleeve
FA4A-4-ASC	HAWK 4" ANSI flange with decoupled connection flange for spray cleaner sleeve

Remote Transducer

AWRT **Acoustic Wave Remote Transducer**
15 15kHz for applications with heavy duty self cleaning requirements

Transducer Diaphragm / Sleeve Material
T Teflon / UHMW (applications suitable for Teflon (no sensor face wear))
Y Titanium face / UHMW (applications with possible sensor face wear eg crushers)

Transducer Housing Material
4 Polypropylene

Thread Standards for End cap
X Not Available

Mounting Thread
X 15kHz - GAWSLV-3-X sleeve mounted (3.5" BSP thread to suit FA4A-4 flange)

Approval Standard
X Not Required
A22 ATEX Grp II Cat 3 GD T85°C IP67 Tamb -40°C to 70°C

Connection
C IP68 Sealed unit with cable

Cable Length
15 15m cable (standard)
30 30m cable

Accessories
X UHMW sleeve

Software Options
AS Gladiator Acoustic Switch

AWRT	15	Y	4	X	X	X	C	15	X	AS

Hazardous area approvals and intrinsically safe options available, contact your local distributor or head sales office for further information.

Cleaning System (GAWC-SYS1)

GAWC-SYS1 cleaner package consists of

GAWC-X
GAWC-SL
GAWC-4P
GAWC-12MML^{z}
GAWC-06MML^{z}

^{z} = specify pipe length in metres

Cleaning System (GAWC-SYS2)

GAWC-SYS2 cleaner package consists of

GAWC-X
GAWC-SL2
GAWC-4P
GAWC-12MML^{z}
GAWC-06MML^{z}

Cleaning System Mounting Flange

FA4A-4-ASC

Spray Cleaner Specifications

Water Pressure

- Maximum: 14bar (1400kpa)
- Minimum: 1bar (100kpa).

Water Usage

- Approximately 200ml per second per transducer (water pressure dependent).

Water Quality

- System requires good water quality. Install filter if required.

Solenoid coil MD-2-24VDC-PC - #549903

Feature	Values
Assembly position	Any
Switching position indicator	No
Duty cycle	100%
Characteristic coil data	24V DC: 6,8W
Permissible voltage fluctuation	+/- 10%
Protection class	IP65
Ambient temperature	-20...50°C
Max. tightening torque for fitting	0.5 Nm
Product weight	110 g
Electrical connection	Per DIN EN 175301-803
Mounting type	With knurled nut
Material information, solenoid coil	Duroplast, Copper, Steel
Material information, coil	Copper

Specifications

Gladiator Acoustic Switch Series

Operating Voltage

- 12-30VDC (residual ripple no greater than 100mV)
- 90-260VAC
- 36-60VDC.

Power Consumption

- <0.8W @ 24VDC
- <6W @ 48VDC
- <5VA @ 240VAC
- <3VA @ 115VAC.

Communications

- GosHawk, Modbus, Modbus over Ethernet, Wi-Fi, Bluetooth
- Multidrop mode can address 1-250 units over 4 wires.

Relay Outputs: (2) Remote

- Form 'C' (SPDT) contacts, rated 5A at 240VAC resistive
- Remote fail-safe test facility for one relay.

Operating Temperature

- Remote Electronics -40°C (-40°F) to 80°C (176°F)
- Remote Transducers -20°C (-4°F) to 80°C (176°F).

Fail-Safe

- Selectable - presence or absence of material.

Maximum Range

- Blocked Chutes:
  Maximum: 15m (50ft) Minimum: 400mm (32").

Junction Box to Amplifier Separation

- Up to 500m (1640ft) using specified extension cable (Belden 3084A).

Junction Box to Transducer Separation

- Up to 30m (98.5ft) using specified extension cable (Belden 3084A).

Maximum Operating Pressure

- 2 BAR.

Display

- 2 line x 12 character alphanumeric LCD
- Backlight standard.

Memory - Remote

- Non-Volatile (No backup battery required)
- >10 years data retention.

Enclosure Sealing

- Remote Electronics: Rated IP65 (NEMA 4x). Designed for and tested to pass IP66 hose and IP67 submergence tandards
- Remote Sensors IP68
- Junction Box IP67.

Cable Entries

- 4 x 20mm (0.8"), 1 x 16mm (0.6") knock outs.
- 1 x M20 Gland / 3/4" NPT threaded adapter.

Mounting

15kHz Blocked Chute

- Transducer 4" ANSI flange with decoupled thread piece
- Pipe Specification: 4-00" Z40 ID = 100mm Black Pipe
- Remote Amplifier Back mount, DIN rail mount.

Typical Weight	kg	lb
• 15kHz Transducer	8	17.6
• Remote Amplifier	1	2.2

All company or product names are registered trademarks or trademarks of their respective owners.

Hawk Measurement Systems
(Head Office)
15 - 17 Maurice Court
Nunawading VIC 3131, AUSTRALIA
Phone: +61 3 9873 4750
Fax: +61 3 9873 4538
info@hawk.com.au

Hawk Measurement USA
5010 Gateway Drive, Medina, OH 44256, USA
Phone: +1 888 HAWKLEVEL (1-888-429-5538)
Phone: +1 978 304 3000 / +1 877-356-5463
Fax: +1 978 304 1462 / +1 330-331-7172
info@hawkmeasurement.com

For more information and global representatives: **www.hawkmeasurement.com**

DOC-ACOUSTIC+ASC-MAN v2.02
0821