A Higher Level of Performance

User Manual

FPM

Flotation PulpMaster



For more information, please visit >

www.hawkmeasurement.com

Contents

Overview 3
Principle of Operation 3
Function 3
Features 3

Wiring 4
HART Units 4
Modbus / Ethernet Units 4

Installation Dimensions 5
Installed Dimensions - Float at full extension (0%) 5
Installed Dimensions - Float fully Retracted (100%) 6

Dimensions 7
Parts 7
Parts 8
6” ANSI Square Mounting Bracket 9
6” ANSI Square Mounting Bracket 10

System Assembly 11
Instructions for Assembly 11

Powering The Unit For The First Time 12

Measurement Reference 13
Displayed Diagnostics 14

Software Parameters 15
Setup Menu 15
Digitize Function 16
Advanced Menu 17

Maintenance 20
Maintenance 20
Re-locating the System 20
Replacing the Electronics 20

HART 21
HART Information / DD 21
HART Variables 21
HART Universal Command List 21
HART Common Practice List 22
Status / Diagnostic Flags 22

Modbus 23
Registers 23
Status Bit Mapping 23

Software Flow Chart 24

Part Numbing 31

Contact 32



Principle of Operation

The HAWK FPM is the continuous level measurement system that has gone one up on the competition with its custom designed pulse guided RF float level technology.

Due to the low coefficient of friction to build up and low profile lightweight HDPE float, the HAWK FPM is proven to be low maintenance while accurately tracking Flotation Cell Pulp / liquid interface levels.

There is no need to worry about regularly cleaning the float and wondering if the level is being measured correctly. The float will not jam causing pulp overspill or froth undercarriage.

Function

The HAWK FPM system is globally unique technology designed exclusively for Flotation cells, solving the challenging level measurement of the Pulp/liquid interface layer.

Features

- Built-in water jet cleaner
- Responds to pulp/liquid level and not affected by froth level
- Low maintenance - not susceptible to build up
- Fast response time with (mm) accuracy
- Analogue/HART/Modbus communication options
- Pulse Guided RF requires only basic setup
- Sensing element entirely encapsulated and protected from the environment
- Minimal surface area, best stability
- Measures the pulp interface up to 1m below the launder.

HART Units

Dual Chamber

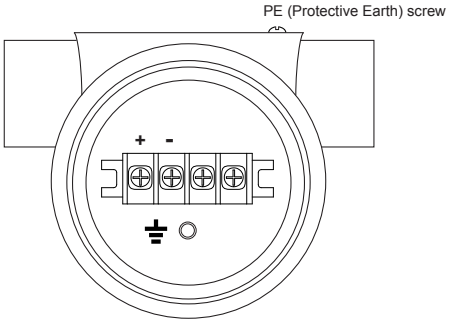

Single Chamber

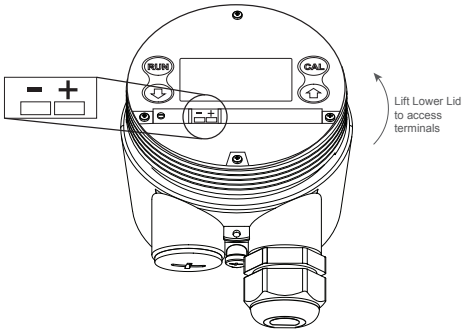

Modbus / Ethernet Units

Dual Chamber

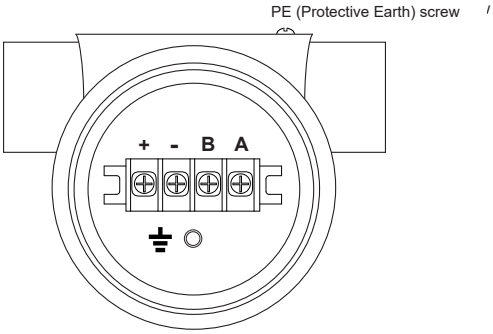

Single Chamber

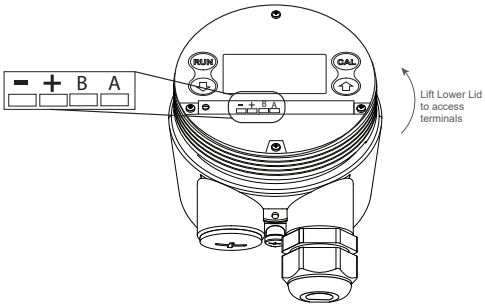

Installed Dimensions - Float at full extension (0%)

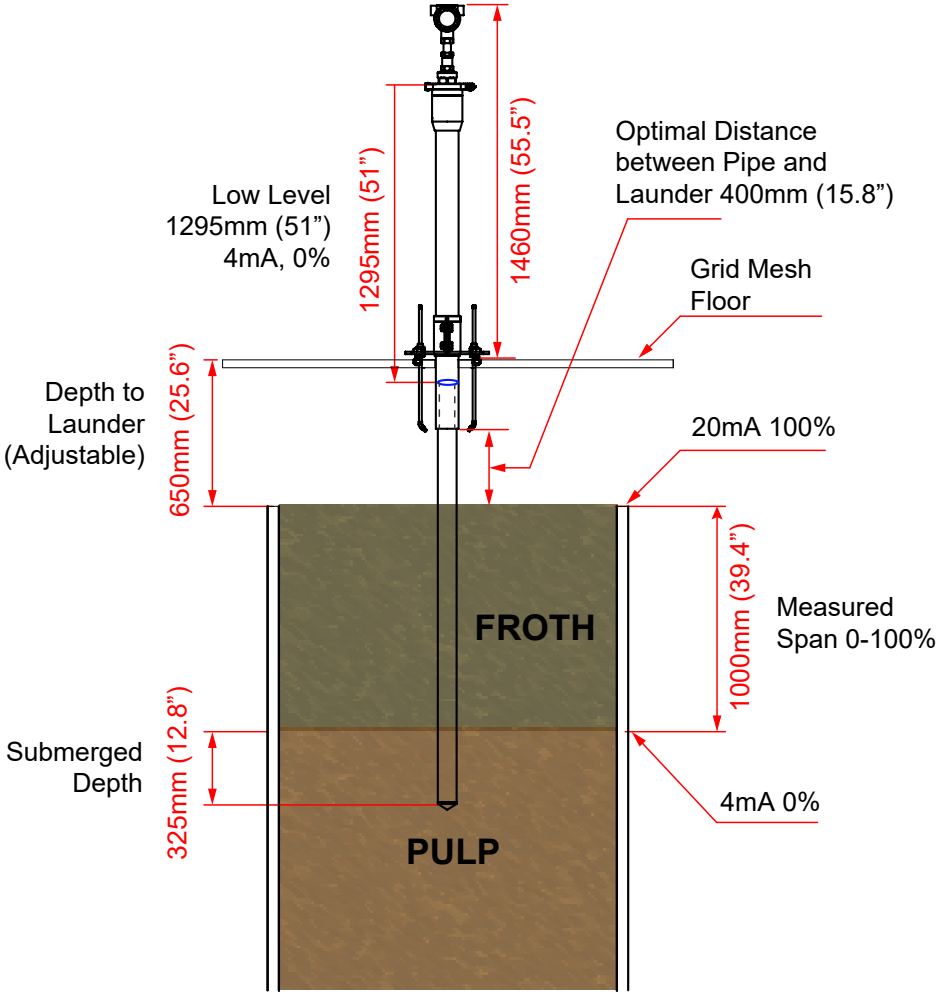

Installed Dimensions - Float fully Retracted (100%)

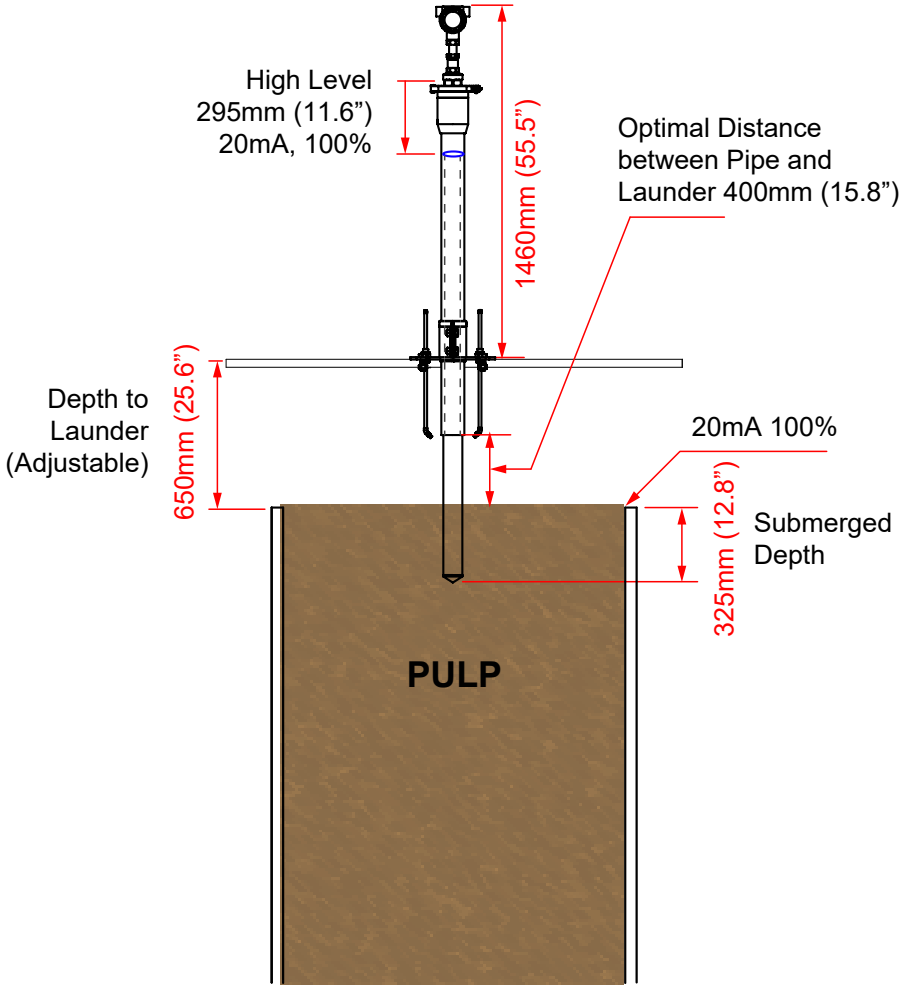

Parts

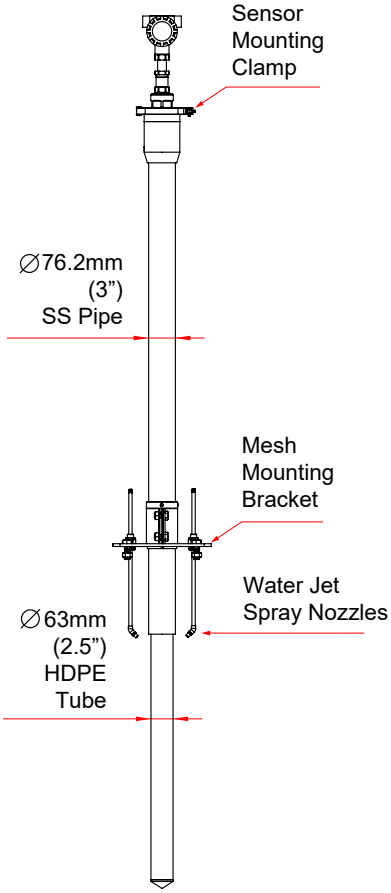
Sensor
Mounting
Clamp
∅76.2mm
(3")
SS Pipe
Mesh
Mounting
Bracket
Water Jet
Spray Nozzles
∅63mm
(2.5")
HDPE
Tube

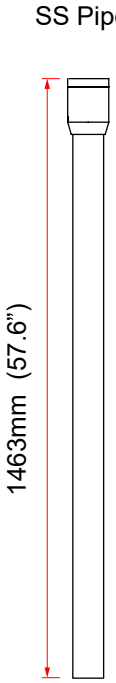
SS Pipe
1463mm (57.6")

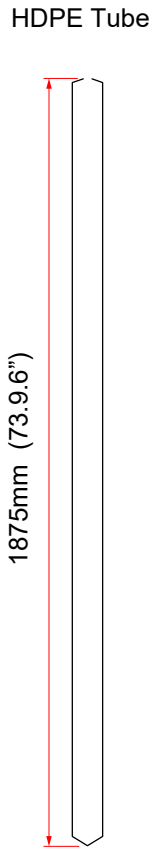
HDPE Tube
1875mm (73.9.6")

Parts

Dual Chamber Enclosure

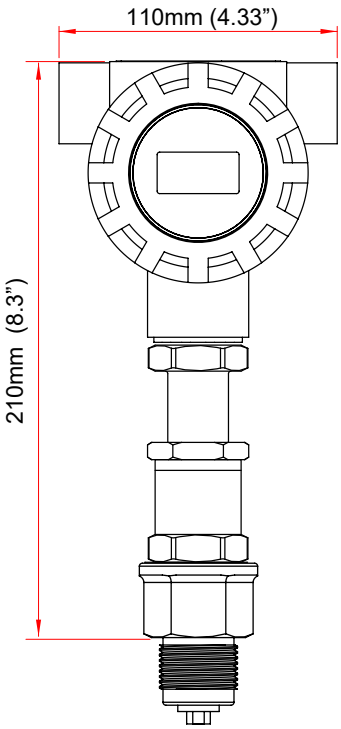

Single Chamber Enclosure

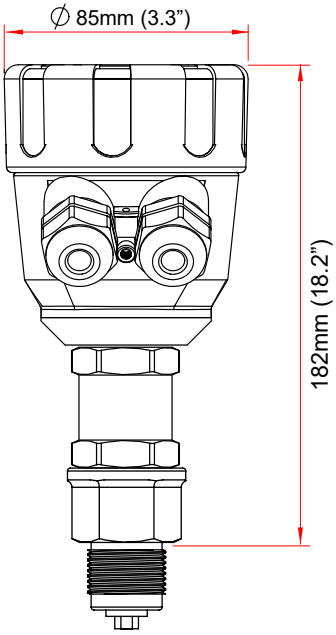

6” ANSI Square Mounting Bracket

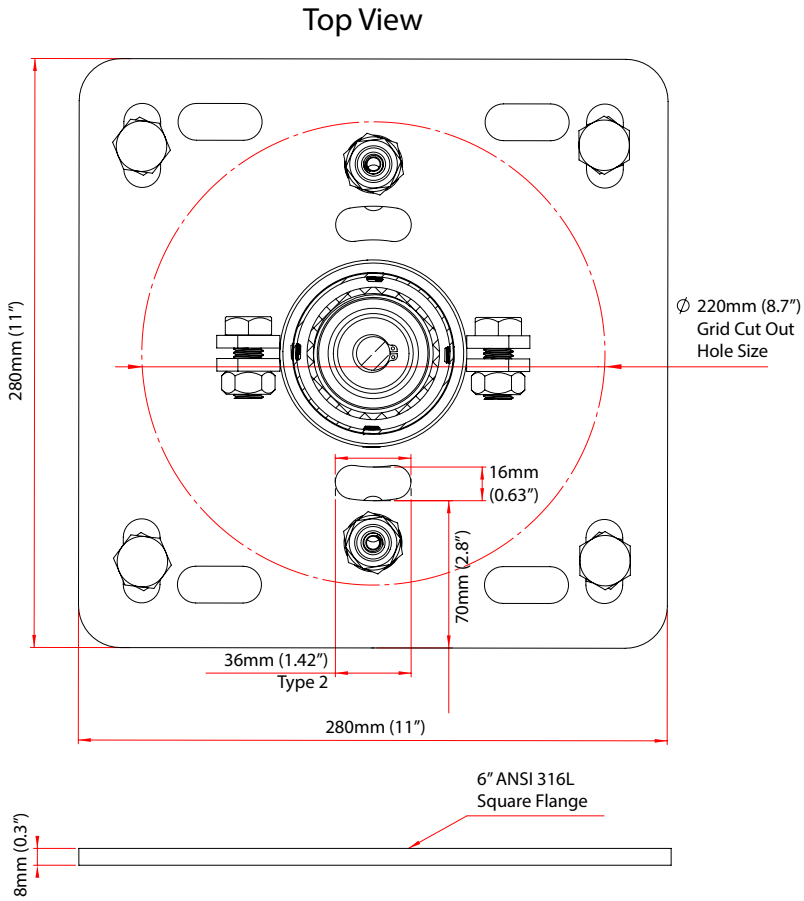

6” ANSI Square Mounting Bracket

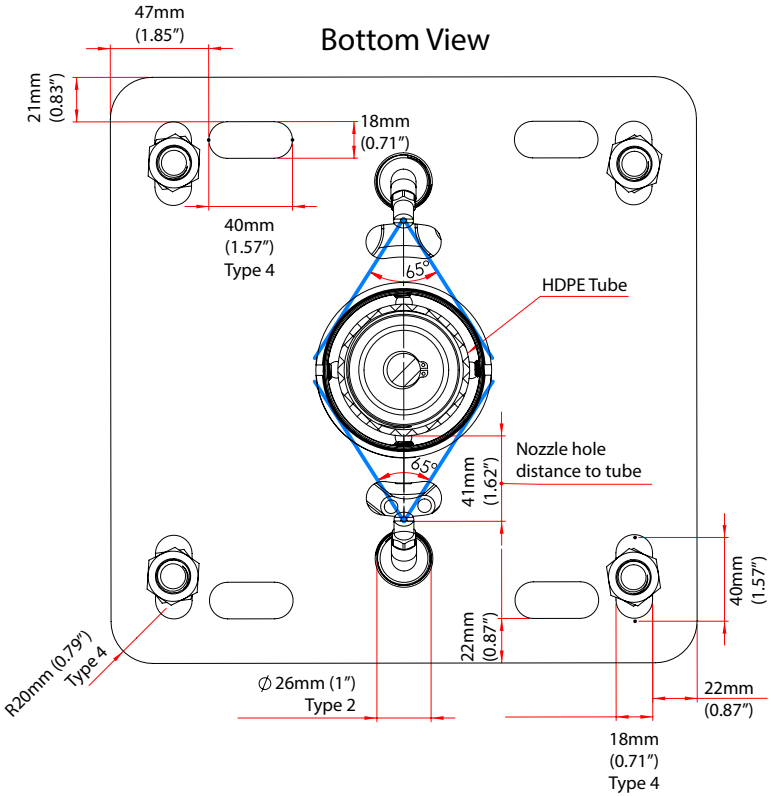

Instructions for Assembly

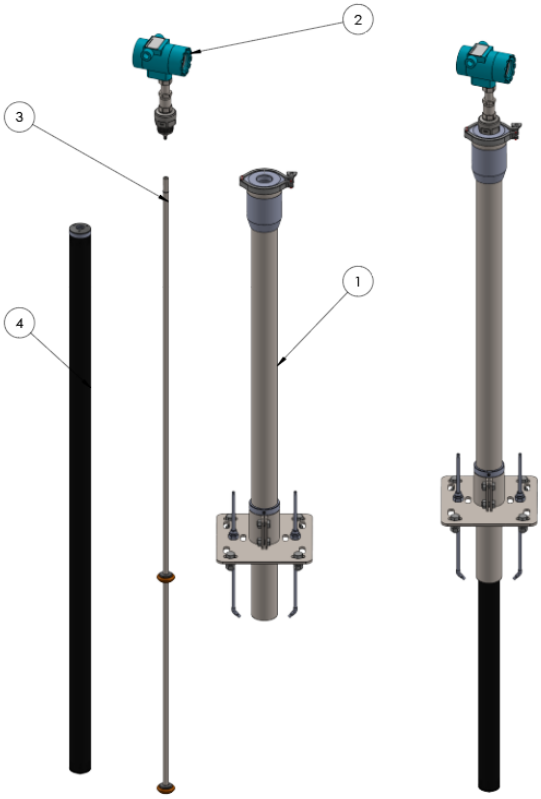

1. Standpipe
2. Sensor Housing
3. Rod
4. Float

A) Adjust clamp-on flange position & spray nozzles if required
B) Place rod assembly through/inside float assembly
C) Undo triclover and take off top cap
D) Thread sensor head (bsp) onto cap
E) Thread sensor head (m10 thread) onto rod
F) Place updated assembly onto standpipe
G) Lock triclover in place

Installation should only be performed by suitably qualified personnel.

A. Confirm mounting is within recommended specifications.

B. Check the selected unit matches the required application specifications.
For Hazardous Locations see appropriate safety instructions available at http://www.hawkmeasurement.com

C. Check the wiring is correct and all connections are secure.

D. Apply power to the unit.

When power is applied the unit will start its normal load sequence.
The following messages will cycle on the display.

Hawk
CGR Series
Serial Number
Software Revision

Menu Navigation

1 Navigate up, increase value

2 Navigate down, decrease value

3 CAL Proceed, select, save

4 RUN Go back, return unit to operational mode

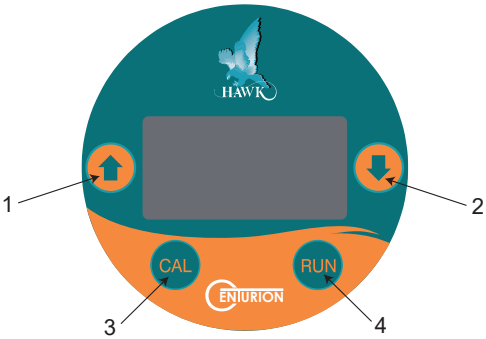

Measurement Reference

A	Distance to High Level (Recommended 295mm, 11.6")
B	Distance to Low Level (Recommended 1295mm, 51")
C	Actively measured span (Recommended 1000mm, 39.4")
D	Pulp / Liquid Interface measured span (Recommended 1000mm, 39.4")

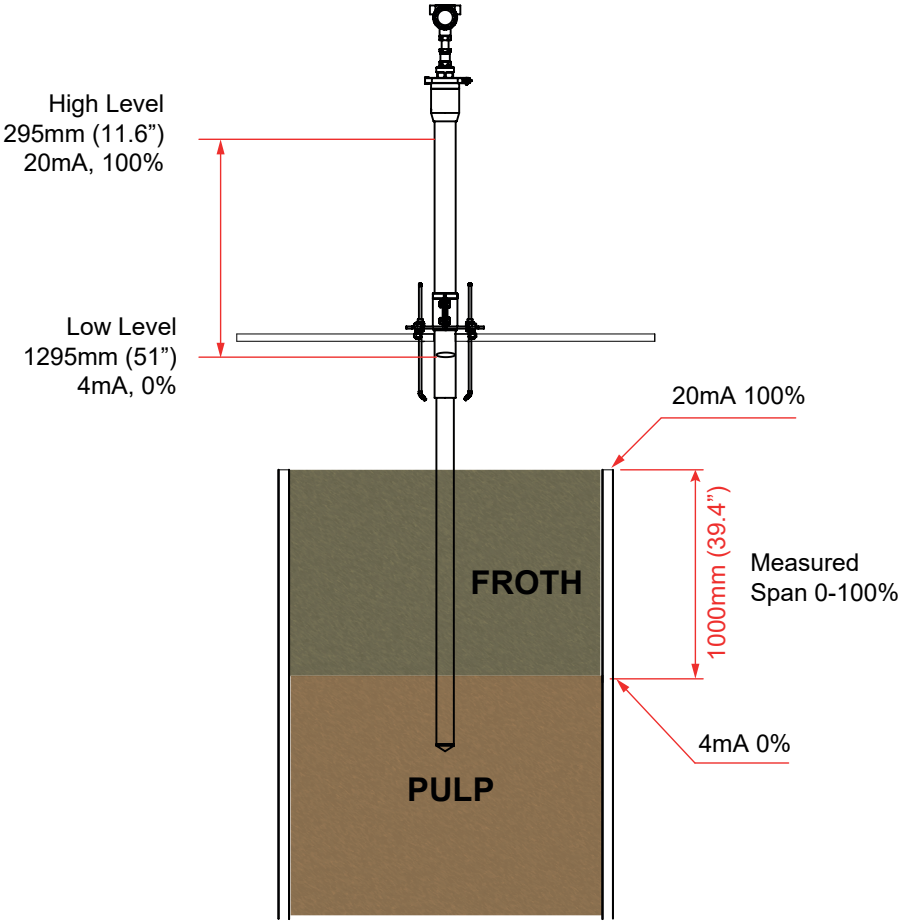

Displayed Diagnostics

While pressing the arrow buttons the top corner of the display cycles through various unit diagnostics

mA	Simulated current output in mA
Normal	Unit operating normally
Failed	Unit in failsafe condition
Recover	Unit searching for level / attempting to amplify signal

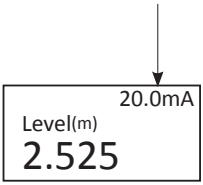

Setup Menu

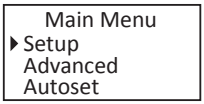

Parameter	Description	Options
Display Mode	Select default Display mode	• Level • %Level • Distance
Display Unit	Adjust displayed measurement unit	• Centimeters • Metres • Feet • Inches
Low Level	Set Low Level (4mA) distance	• Adjustable (1)
Hi Level	Set High Level (20mA) distance	• Adjustable (1)
Damping	Adjust output response time & smoothness	• Adjustable
Digitize	The 'Digitize' function is an automatic setup routine used to eliminate false reflections typically from non-confirming mounting. The Pulp Master system is a fully enclosed sensing element so this parameter function is typically not required.	• Yes • No • Disable
Tracking	Program application process speed. Unit updates at 2.5 pulses per second Fast: Max. 150mm (6") per pulse within a distance of 500mm (18”) of the last echo. Damping: 5 Medium: Max. 100mm (4") per pulse within a distance of 300mm (18”) of the last echo. Damping: 20 Slow: Max. 50mm (2") per pulse within a distance of 150mm (6”) of the last echo. Damping: 50 InstaTrack: A special mode which we respond immediately to any detected reflection. Damping: 2 Test: Adjusts unit function to be suitable for bench testing and demonstration. The unit will track nearest detected reflection regardless of size.	• Fast • Medium • Slow • InstaTrack • Test
Dielectric	Applies a pre-set value to Sensitivity% based on selected Dielectric Constant. The Pulp Master's sensing assembly will typically function correctly with a high Dielectric selection.	• Adjustable

(1) See 'Measurement Reference'

Fail Mode	Set Analogue failsafe output	• 3.50mA • 3.80mA • > 20.20mA • LastKnown • 4mA • 20.00mA > 21.50mA
Fail Time	Set time delay for FailSafe condition (in seconds)	• Adjustable

Digitize Function

The 'Digitize' function is an automatic setup routine to create a digital map of false echoes generated by problems such as non-recommended mounting.

For the Pulp Master system, this function is typically not required.

If it is required, it should be performed only while the system is reading empty / 0%, or the Digitized Distance should be no greater than the High Level value

When the function is performed, the user will be prompted to close the lid while a count down takes place.

Advanced Menu

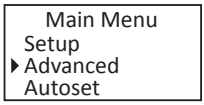

Parameter	Description	Options
Comms	Adjust communication protocol settings.	• Device ID • Baud Rate
Blanking	Blanking is a non-measurable zone. This can be increased to 'Blank' out high level false echoes caused by mounting	• Adjustable <150mm (6") is not recommended
Check Echoes	The unit will scan and display the distance to the 2 closest echoes and the minimum % Sensitivity required to detect them. This can be used to tune the Sensitivity% requirement to detect the internal target.	
Sensitivity	Manual adjustment of Sensitivity. Dielectric selection automatically sets this value to defaults based on the Dielectric selection. Sensitivity is the primary adjustment for the unit's ability to detect media. If the unit is not detecting the target correctly, this parameter can be increased.	• 0-100
OffsetDist	Add or a subtract an offset distance to the measured output	• Adjustable
ProbeCalibr Password protected (222)	• Probe Length If physical length of probe is adjusted you must adjust the Probe Length parameter to match the new length. You can also use the CalibrateEnd function below.	• Adjustable
	• ProbeEndTied ProbEndTied tells the unit whether the Probe End is tied / secured to the vessel or not. This parameter is not required for Pulp Master units	• No (Open) • Yes (Tied)
	• CalibrateEnd CalibrateEnd is used to detect the Probe Length. After finished scanning, it will display the detected Probe End. The value can be manually adjusted. If the value is too long, it may result in a Probe Error. The detected length may have a slight inaccuracy. This parameter will only detect the internal probe and not include any additional float element. It is typically not required for Pulp Master units	
ProbeFault	Probe Fault will activate Failsafe in the event of a missing Probe	• Enable / Disable

Advanced Menu

Dist Calibr	Calibrate distance correction factor. Some applications or environments can affect time of flight signal travel affecting the measured distance reading. This function allows the detected distance to be adjusted to suit the application.	• Adjustable
Analog	Adjust Analog output. Switch from 4-20mA to 20-4mA Fine tune both 4mA current and 20mA current reading Park (Lock) Current to 4, 8 or 12mA.	• 4-20 • 20-4 • 4mA tuning • 20mA tuning • Park 4/8/12mA
Scope	Allows viewing of a scope type live signal trace. Scope Sens adjusts the amplification of the visible trace where 0 is the most amplification	Scope View Scope Sens
Factry Reset	Restore all parameters to factory default.	• Yes / No
Device Info	Display device information	
Lock Code	Enable / Disable lock code. If enabled, select lock code number.	• Enable / Disable
Flip LCD	LCD orientation set depending on housing type. Adjustment not required.	
Detect Mode	Detect Modes adds additional functionalities to the CGR detection decision making & software. They are primary aimed at the more difficult applications which are typically both long range and have a low dielectric measured material (such as powders). Mode 1: Adds Variable Sensitivity, Covered Probe Echo Prediction, Covered Probe Tracking Window Prediction Mode 2: Adds Variable Sensitivity, Covered Probe Echo Prediction Mode 3: Adds Variable Sensitivity (suitable for all applications) Modes 4 & 5: Digitize Transition Smoothing (a diagnostic mode for Advanced Hawk users).	• 1 • 2 • 3 • 4 • 5

Advanced Menu

Low Sens End / LoSensitivity	Low Sens End works in tandem with LoSensitivity. This allows a control for the maximum amount of Sensitivity the unit can apply at close range. The distance (measured from mounting bush / flange down) is set using Low Sens End and the % Sensitivity is set using LoSensitivty. Long range, low dielectric applications may require a higher Sensitivity value which potentially creates problems at close range (due to obstacles / non confirming mounting). These parameters allow the user to set a maximum Sensitivity value to ignore these problems. *Illustrated Example - Low Sens End set to 1m (3ft), LoSensitivity set to 70%*	• Adjustable (Distance) • Adjustable (%)
ProbeEnd(mV)	Sets the minimum signal size accepted as the end of probe echo. The default is 200mV. This value can be increased when using Detect modes 1 and 2 as when material begins to cover the probe, the end of probe echo will get smaller allowing the modes to activate sooner. Goshawk scope mode or LCD scope trace can also be used to visually check.	• Adjustable (mV)

Maintenance

The upper section of the float that is not submerged may begin to build up dried product over time.

This can be cleaned using water while mounted in the application if accessible.

Alternatively the system can be removed from the stand pipe to access the probe for cleaning.

Ensure no liquid enters the top of the float as this will affect the buoyancy

Re-locating the System

If the system is going to be moved to a different installation or application, the entire kit (including stand pipe) should be moved.

Replacing the Electronics

The electronics (with no probe and no mounting kit) can be purchased as a separate part.

HART Information / DD

HART Revision 7

DTM/DD files available at https://www.hawkmeasurement.com/downloads/software-and-drivers/

Supported hosts include PRM, Fieldmate and AMS. DD files for the 475 Communicator are available.

HART Variables

Variable	Function	Function (for Interface model type)
Primary	Level	Level 2
Secondary	Unfiltered echo distance	Level 1
Third	Echo signal size	Level 2 echo signal size
Fourth	Temperature	Temperature

HART Universal Command List

Command No.	Function
0	Read unique identifier
1	Read Primary Variable
2	Read current and percent of range
3	Read current and four predefined dynamic variables.
6	Write polling addr
7	Read loop configuration
8	Read Dynamic Variable Classifications
11	Read unique ident. Associated with tag
12	Read message
13	Read Tag, Description, Date
14	Read PV sensor information
15	Read output information
16	Read final assembly number
17	Write message
18	Write Tag, Description, Date
19	Write final assembly number
20	Read Long Tag

HART Common Practice List

Command No.	Function
34	Write Primary Variable Damping Value
35	Write Primary Variable Range Value
36	Set Primary Variable Upper Range Value
37	Set Primary Variable Lower Range Value
38	Reset Configuration Changed Flag
40	Enter/Exit Fixed Primary Variable Current Mode
44	Write Primary Variable Units
45	Trim Primary Variable Current Dac Zero
46	Trim Primary Variable Current Dac Gain
57	Read Unit Tag, Descriptor, Date
58	Write Unit Tag, Descriptor, Date
59	Write Number Of Response Preambles
109	Burst Mode Control
110	Read All Dynamic Variables

Status / Diagnostic Flags

Status / Diagnostic Flags
Device Malfunction (Fails safe status)
Configuration Changed
Cold Start
Output Current Fixed
Primary Variable Out of limits

Registers

Address	Variable / Description	Conversion to Feet
720	Primary Variable (Level in mm)	Div. by 304.7851
723	Low Level (mm)	Div. by 304.7851
724	High Level (mm)	Div. by 304.7851
725	Primary Variable Status	
726	Primary Variable (Distance in mm)	Div. by 304.7851
727	Primary Variable Percentage (divide by 10)	

Status Bit Mapping

Bit	Description
4	Confirmed Status (Unit tracking valid echo)
F	Failed (unit in failsafe condition) Primary Variable only

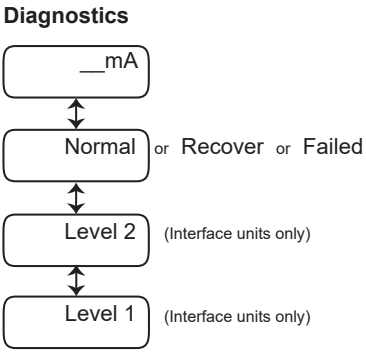
Diagnostics
__mA
Normal
or Recover or Failed
Level 2
(Interface units only)
Level 1
(Interface units only)

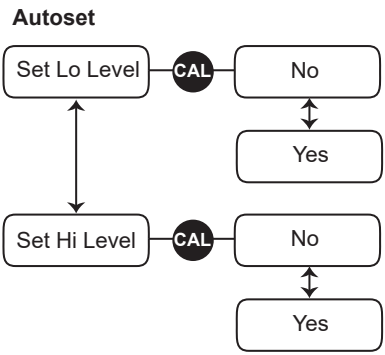
Autoset
Set Lo Level
CAL
No
Yes
Set Hi Level
CAL
No
Yes

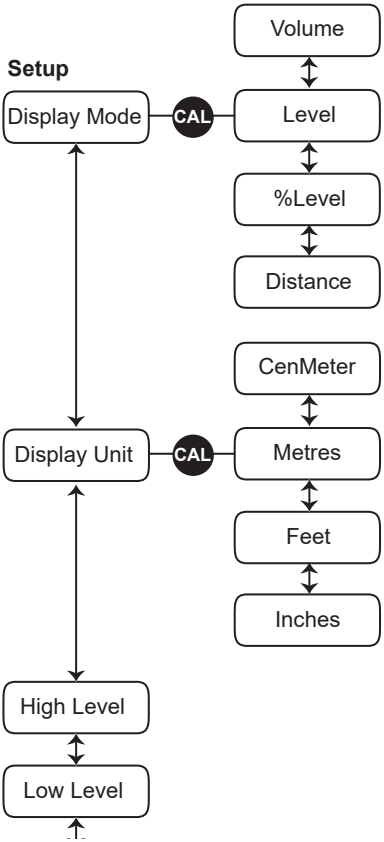
Setup
Display Mode
CAL
Volume
Level
%Level
Distance
Display Unit
CAL
CenMeter
Metres
Feet
Inches
High Level
Low Level

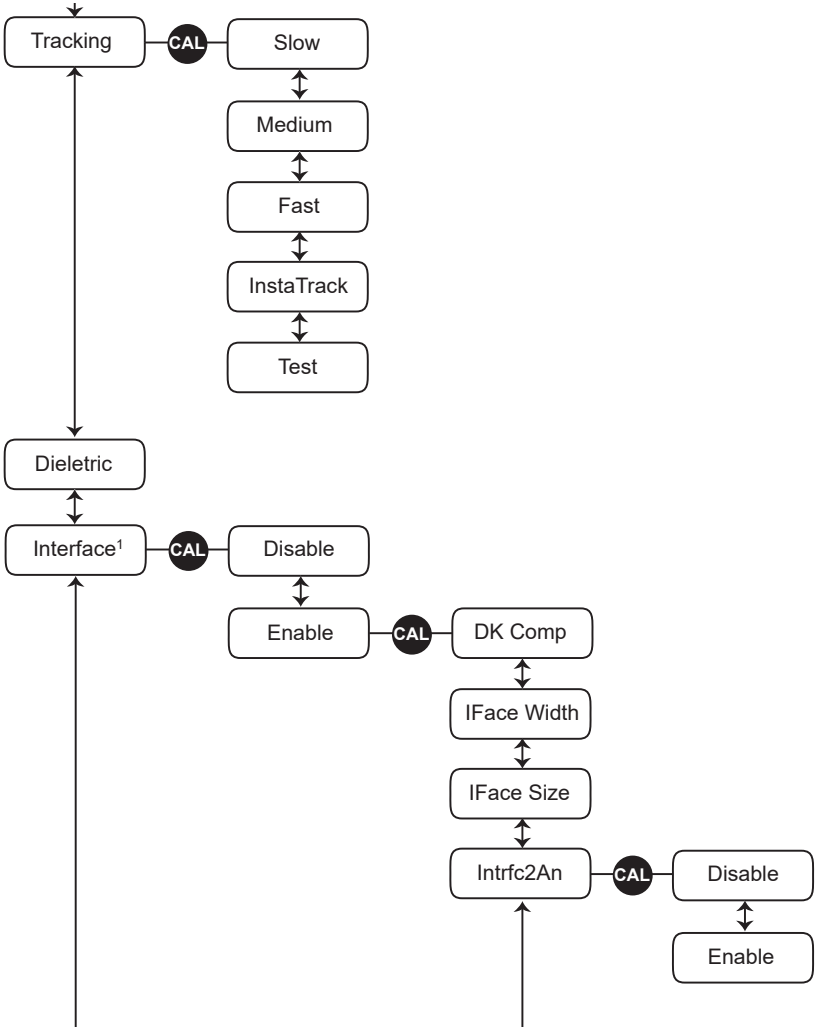

1. If Interface mode is present, it should not be used for FPM system

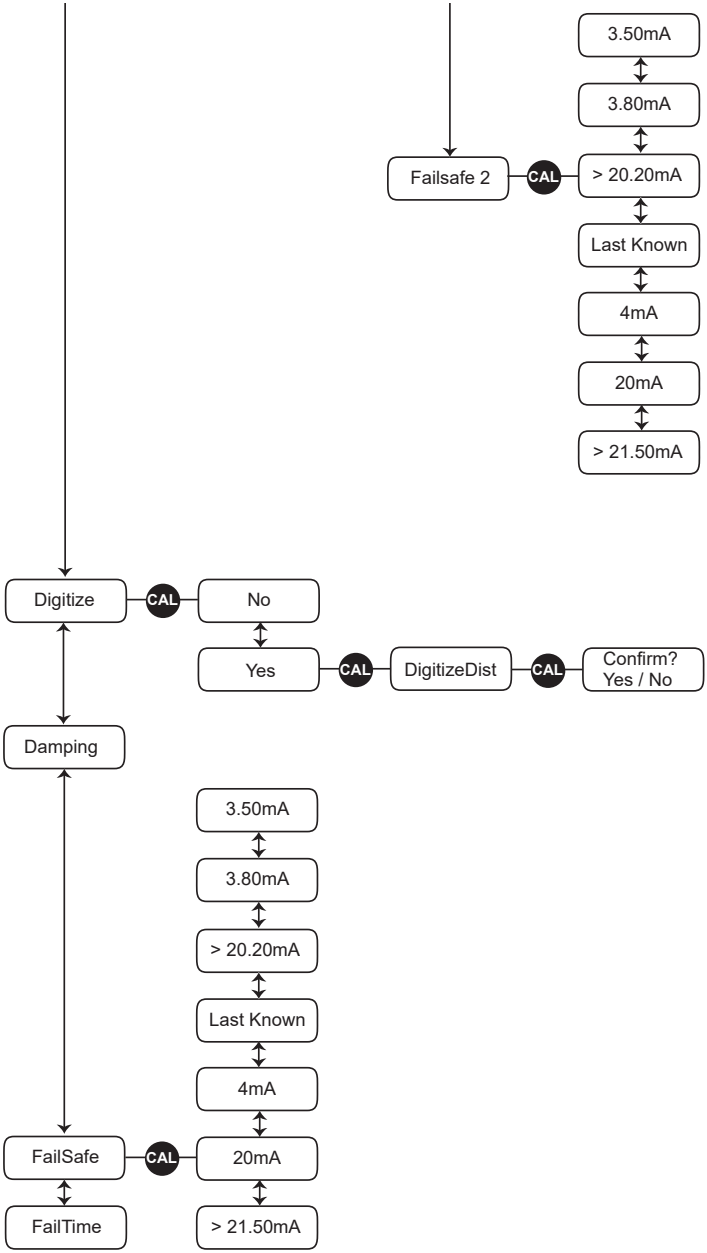
3.50mA
3.80mA
Failsafe 2
CAL
> 20.20mA
Last Known
4mA
20mA
> 21.50mA
Digitize
CAL
No
Yes
CAL
DigitizeDist
CAL
Confirm?
Yes / No
Damping
3.50mA
3.80mA
> 20.20mA
Last Known
4mA
FailSafe
CAL
20mA
FailTime
> 21.50mA

Modbus units only

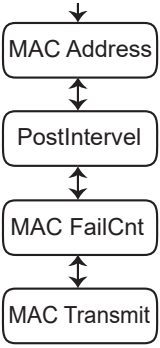

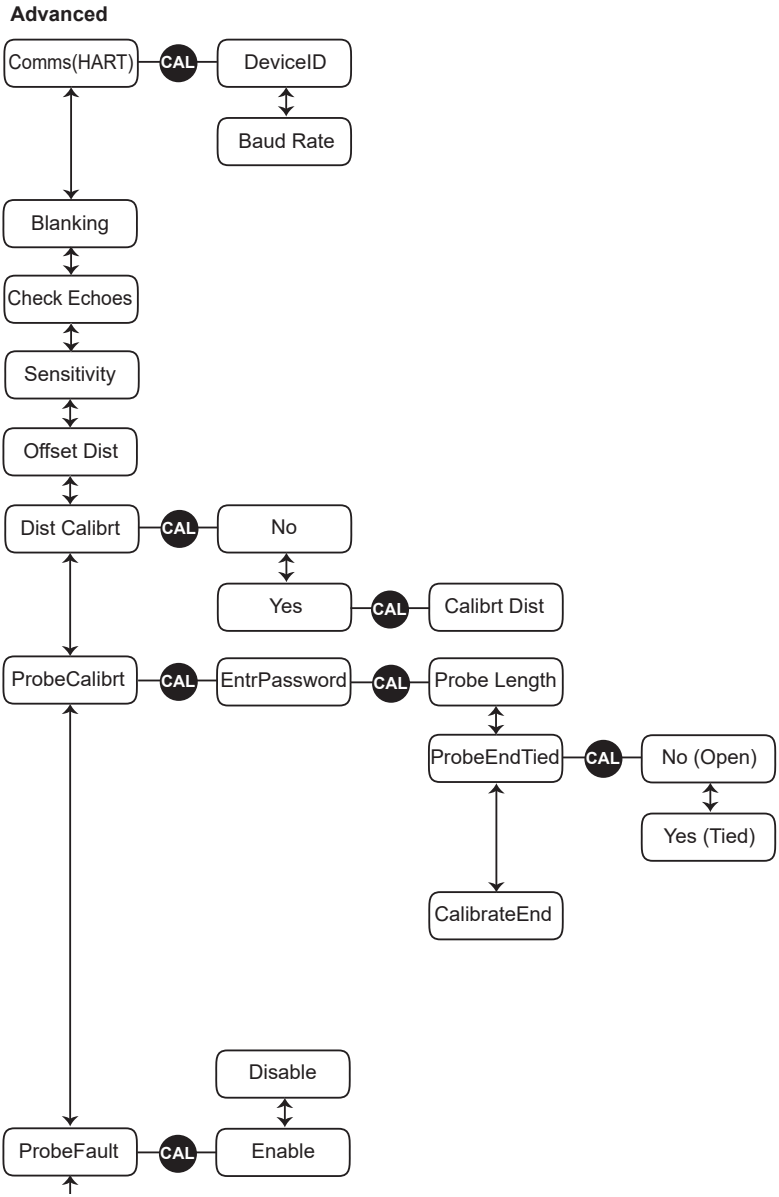
Advanced
Comms(HART)
CAL
DeviceID
Baud Rate
Blanking
Check Echoes
Sensitivity
Offset Dist
Dist Calibrt
CAL
No
Yes
CAL
Calibrt Dist
ProbeCalibrt
CAL
EntrPassword
CAL
Probe Length
ProbeEndTied
CAL
No (Open)
Yes (Tied)
CalibrateEnd
Disable
ProbeFault
CAL
Enable

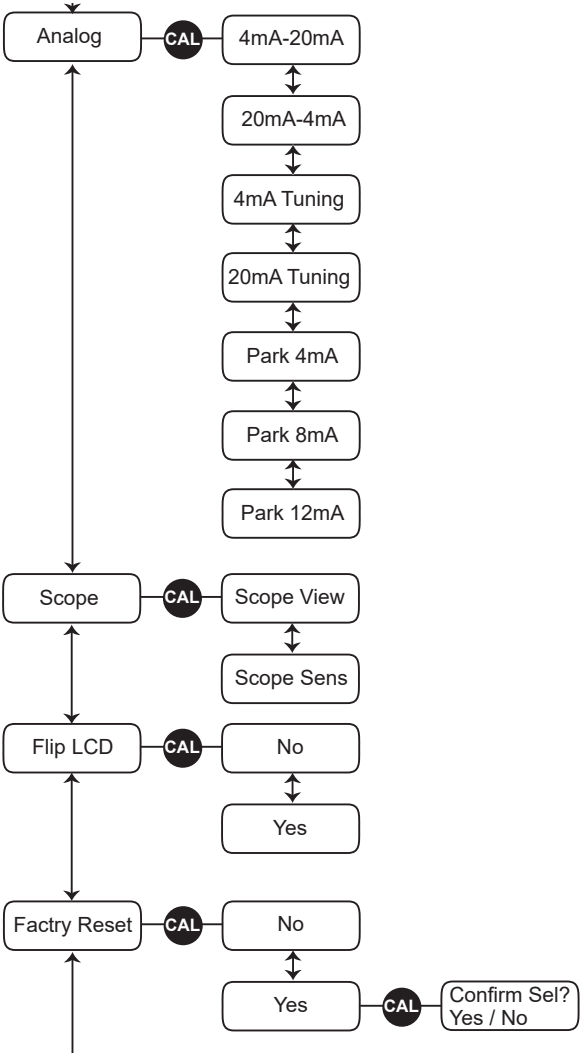
Analog
CAL
4mA-20mA
20mA-4mA
4mA Tuning
20mA Tuning
Park 4mA
Park 8mA
Park 12mA
Scope
CAL
Scope View
Scope Sens
Flip LCD
CAL
No
Yes
Factry Reset
CAL
No
Yes
CAL
Confirm Sel?
Yes / No

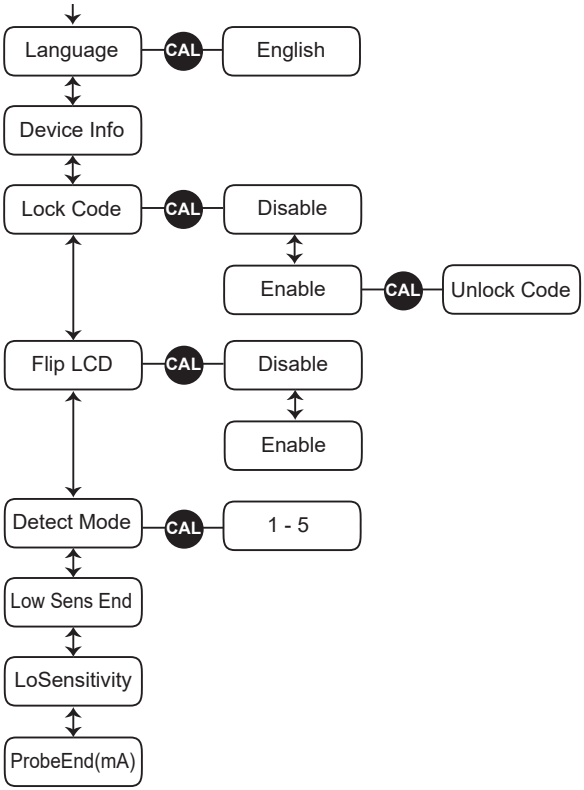
Language
CAL
English
Device Info
Lock Code
CAL
Disable
Enable
CAL
Unlock Code
Flip LCD
CAL
Disable
Enable
Detect Mode
CAL
1 - 5
Low Sens End
LoSensitivity
ProbeEnd(mA)

Model

FPM2H Flotation Pulp Master, 2 wire loop with HART 7
FPM4M Flotation Pulp Master, 24VDC, 4 wire with Modbus
FPM4E Flotation Pulp Master, Modbus over PoE (Powered Ethernet)

Housing

1 Dual Chamber Aluminum, Epoxy Painted with viewing window
2 Dual Chamber 316L Stainless Steel with viewing window
A Single Chamber Aluminum, powder coated with viewing window.
B Single Chamber Aluminum, powder coated, no viewing window.
C Single Chamber 316L with viewing window, M20 conduit only
D Single Chamber 316L with no viewing window. M20 conduit only

Display and Keypad for Housing options 1 & 2 are side mount. Options A, B, C, D are top mount

Electrical Conduit Entry

1 1/2" NPT
3 M20 x 1.5

Sensor Element Materials

XXX Not Required (Electronics only)
HSP HDPE encapsulated SS316

Mounting

XXX Not Required (Electronics only)
ADJ 6" square multi-fit clamp-on flange with float cleaner spray assembly

Measured Range (Maximum Froth Height)

XXX Not Required (Electronics only)
1000 1000mm

FPM2H	1	3	HSP	ADJ	1000



All company or product names are registered trademarks or trademarks of their respective owners.

Hawk Measurement Systems
(Head Office)
15 - 17 Maurice Court
Nunawading VIC 3131, AUSTRALIA
Phone: +61 3 9873 4750
Fax: +61 3 9873 4538
info@hawk.com.au

Hawk Measurement
5010 Gateway Drive, Medina, OH 44256, USA
Phone: +1 888 HAWKLEVEL (1-888-429-5538)
Phone: +1 978 304 3000 / +1 877-356-5463
Fax: +1 978 304 1462 / +1 330-331-7172
info@hawkmeasurement.com

For more information and global representatives: **www.hawkmeasurement.com**

Technical data subject to change without notice.

DOC-FPM-MAN Rev. 1.02 0524