A Higher Level of Performance

User Manual

MiniWave

Ultrasonic Level Series

Liquid Level Measurement



For more information, please visit >

www.hawkmeasure.com

Contents

Overview 3
Overview 3
Principle of Operation 3
Model Type 3

Dimensions & Wiring 4
Dimensions 4
Flange 4
Wiring 4

Installation 5
Mounting 5
Powering The Unit 6
Interface 6

Commissioning - Software 7
Startup 7
Main Menu 7
Setup 7
AutoSet 7
Advanced Settings 8

HART 9
HART Universal / Common Practice command list 9

Troubleshooting 10
Unit is displaying incorrect distance 10
Analogue trend is erratic/unstable 10
Unit is locked up or flat line measurement 10
PLC indication does not match measurement 10
AutoSet fails 10

Model Types - Part Numbers 11
Model Type 11
Accessories 11

Specifications 12

Overview

MiniWave is a compact, loop-powered ultrasonic level transmitter for continuous measurement of liquids. As a price leader, it does not compromise on good value; and provides effortless and intuitive operation. Easy and flexible mounting combined with high chemical compatibility and 12-metre measuring range makes the MiniWave suitable in multiple applications in all industries.

Principle of Operation

The MiniWave emits an ultrasonic pulse, which is reflected from the surface of the liquid being measured. The reflected signal is processed using specially developed software to enhance the correct signal and reject false echoes.

Automatic sensitivity control allows the unit to dynamically adjust and improve the received echoes for the best possible measurement outcome.

Model Type

MWN1A - MiniWave with 2” NPT thread

MWB1A - MiniWave with 2” BSPT thread



A - Removable lid with viewing window

B - Electronics housing

C - M20 cable gland

D - NPT or BSPT thread

E - Transducer face

Dimensions

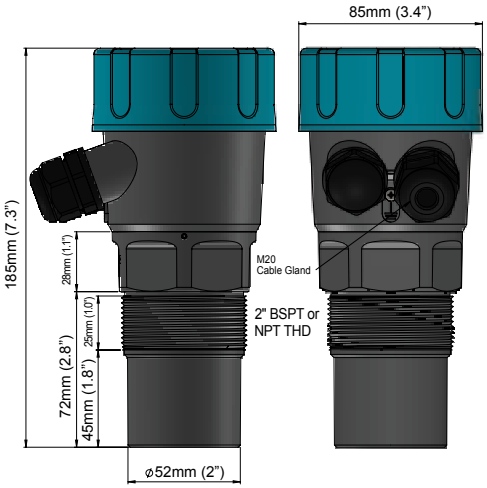

Wiring

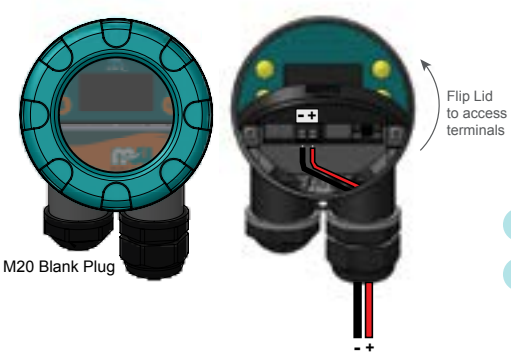

Flange

FA2NB-4 - 2" ANSI Polypropylene Flange for NPT threaded units

FA2BB-4 - 2" ANSI Polypropylene Flange for BSPT threaded units

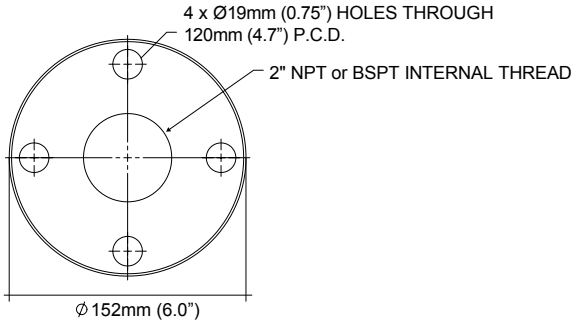

Mounting

- Sensor should be mounted 1/3 the diameter of the vessel from the vessel wall
- Unit should never be closer than 250mm (10") to the liquid surface
- Do not mount over or near objects which can interfere with the unit measurement
- Do not mount in the centre of a curved roof to avoid the potential of parabolic echoes

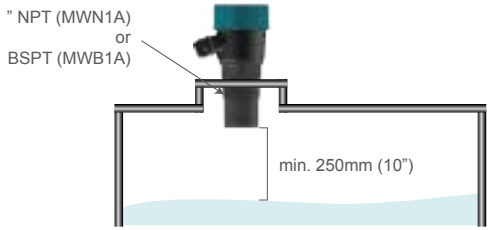

These are examples of common INCORRECT mountings which can prevent the unit from operating correctly.

Do **NOT** mount near infeed

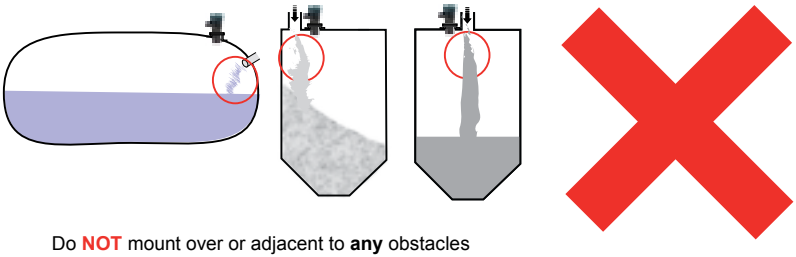

Do **NOT** mount over or adjacent to **any** obstacles

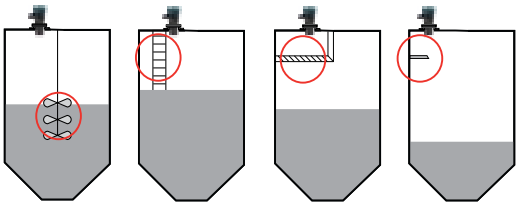

Do **NOT** mount cone or transducer face above roofline

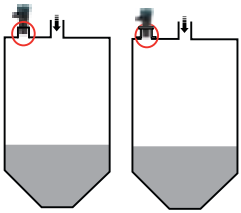

Do **NOT** mount on angle in liquid applications

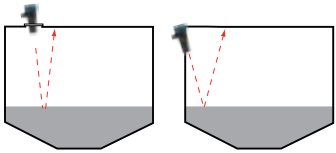

Powering The Unit

When power is applied, the unit will start up automatically. The LCD will scroll through its boot diagnostics and display the serial numbers, software version and model types for the amplifier and transducer.

The selected Display Mode will be visible with a measurement.

The top right hand corner diagnostic indicates either the operating mode or the current output.

The unit will re-scan for the level whenever it is powered up.



Interface

Button	Action	Navigation / Function
CAL	Press and release	Access Main Menu Select / Proceed
	Press and hold for 3 seconds	Access AutoSet Menu
RUN	Press and release	Cancel / Return Re-activate unit
⬆ ⬇	Press and Release	Scroll between live diagnostics Scroll between menu options Adjust parameters

Startup

The MiniWave uses automatic sensitivity control to detect and maintain the level. After applying power to the unit allow 20-30 seconds for the unit to adjust to the application*.

*For best results ensure there is a liquid level present in the application or flat surface below the transducer

Main Menu

To access the Main menu press CAL

To access AutoSet menu press and hold CAL for 3 seconds

Setup

Parameter	Description	Options				
Display Mode	Set LCD measurement display mode	Level	% Level	Space	Volume*	
Display Unit	Adjust displayed measurement unit	MilMetre	CenMetre	Metres	Feet	Inches
Low Level	Set Low level measurement point (4mA)	Adjustable				
High Level	Set High level measurement point (20mA)	Adjustable				
Damping	Adjust output response time & smoothness	Adjustable in seconds				
Failsafe	Set failsafe output	3.50mA 4mA	3.80mA 20mA	20.20mA LastKnown		

** Volume mode requires PC with GoshawkII software. Consult dedicated MiniWave GoshawkII Manual*

AutoSet

Use AutoSet to scan and program the unit High or Low level to the distance detected. After the scan you will be prompted to accept the distance measured. The High and Low level can also be manually adjusted in 'Setup'.

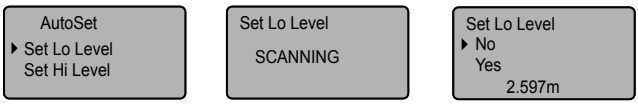

Advanced Settings

Parameter	Description	Options		
Comms	Adjust HART protocol settings.	Device ID Default 1	BaudRate 1200	
Blanking	Blanking is a dead-band / non measured range. The unit cannot measure within this range.	Adjustable - recommended default 250mm (10")		
Tracking	Adjust tracking response time for application. The faster the tracking, the more responsive the measurement is, but it is less smooth the output signal. InstaTrack provides pulse by pulse live measurement.	Slow Medium Fast InstaTrack		
Mapping	Mapping creates a digital 'map' of false echoes caused by problem mounting and structures. Select 'ExecuteMap' to set a mapped distance, conduct or delete Mapping. Select 'MappedDist' to view a previously mapped distance.	MappedDist		
		ExecuteMap	Set Map Dist	
EchoSize	The unit will target this echo size (measured in signal voltage) during operation. High values can increase stability but make the unit more susceptible to false echoes. Lower values can make the unit less sensitive and less likely to see false echoes.	0.4 - 2.49V Default 0.59V		
Analog	Adjust Analog output. Switch from 4-20mA to 20-4mA and fine tune both 4mA current and 20mA current.	4-20mA 20-4mA	Tune 4mA Tune 20mA	Park 4mA Park 8mA Park 12mA
Sensitivity	Increase or decrease the unit Automatic Sensitivity Control range.	0: Lowest 10: Default 20: Highest		
WaveBoost	WaveBoost adds additional echo amplification on top of the Automatic Sensitivity Control. WaveBoost should only be used if maximum Sensitivity is not sufficient.	0: Lowest (default) 20: Maximum		
Factry Reset	Restore all parameters to factory default.	Yes / No		
Device Info	Displays product type, serial number & software revision.			
Lock Code	Enable / Disable lock code. If enabled, select lock code number.	Enable / Disable Default Disabled	1-200	

HART Universal / Common Practice command list

The MiniWave supports the following Universal and Common commands

Command No.	Function
0	Read unique identifier
1	Read Primary Variable
2	Read current and percent of range
3	Read current and four predefined dynamic variables.
6	Write polling addr
7	Read loop configuration
8	Read Dynamic Variable Classifications
11	Read unique ident. associated with tag
12	Read message
13	Read Tag, Description, Date
14	Read PV sensor information
15	Read output information
16	Read final assembly number
17	Write message
18	Write Tag, Description, Date
19	Write final assembly number
20	Read Long Tag
34	Write damping value
35	Write range values
36	Set Upper Range
37	Set Lower Range
38	Reset Configuration flag
40	Current fixed mode
45	Set 4 mA trim
46	Set 20 mA trim
44	Write PV units
57	Read unit tag, descriptor, date
58	Write unit tag, descriptor, date
59	Write number of response preambles
109	Burst mode control
110	Read all dynamic variables

Unit is displaying incorrect distance

- Confirm display mode is suitable.
  Space is measured from Sensor face to measured level.
  Material is measured from Low Level to measured level.
- If unit is measuring too deep increase **Sensitivity**. If the unit continues to measure too deep, increase **WaveBoost**
- If unit is measuring too high, reduce **Sensitivity** and ensure **WaveBoost** is set to 0.
- Check if material is present to be measured. Unit will output and display FailSafe reading if it cannot detect a level within range.

Analogue trend is erratic/unstable

- Increase '**Damping**' value for smoother trends.
- Choose a slower '**Tracking**' speed.
- Check there are no objects interfering with the transit pulse in the application (such as ladders and cross beams).

Unit is locked up or flat line measurement

- Confirm there is material within measurement range, the unit may go to Failsafe if there is no flat level available.
- If the unit is locked to a high level perform **Mapping** for distance beyond false echoes.
- If the unit is locked higher than the real level check for objects interfering with the transit pulse in the application (such as ladders and cross beams). Lower the **Sensitivity/WaveBoost**. Re-locate the installation to avoid the interfering object.
- If the unit is locked lower than the real level confirm the application is not within **Blanking** distance. Increase **Sensitivity/WaveBoost** until unit measures correct level.
- **Tracking** speed may be too slow for the application. Increase **Tracking** speed.

PLC indication does not match measurement

- Connect a Multimeter in series with the powered loop. Compare the 'mA' diagnostic on the display with the mA reading on the loop. If these values do not match, disconnect the loop wires and measure the resistance across the loop. This should not exceed specification.
- Confirm **High Level** and **Low Level** are set to the same values in MiniWave and control system.

AutoSet fails

- Increase '**Sensitivity**' to a higher value.
- Allow the unit to run for a longer time (one minute). Re-attempt the AutoSet.
- Increase **WaveBoost and re-**attempt the AutoSet.
- Set High and Low level manually in 'Setup' menu.

If problems persist, install replacement MiniWave in the application.

'Bench test' the problem unit in a controlled environment.

Difficult applications may required a low frequency Acoustic Wave device. Contact HAWK for information about the Sultan series.

Model Type

MWN1A - MiniWave with 2” NPT thread

MWB1A - MiniWave with 2” BSPT thread

Accessories

FA2NB-4 - 2” ANSI Polypropylene Flange for NPT threaded units

FA2BB-4 - 2” ANSI Polypropylene Flange for BSPT threaded units

Hawklink-MiniUSB - PC connecter for GoshawkII

Frequency

• 50 kHz

Operating Voltage

• 7 - 28VDC at the terminal
(residual ripple no greater than 100mV)

Power Consumption

• 500mW @ 24VDC

Analog Output

• 4 -20mA modulating output module with HART
(Recommended 250 Ohm @ 24VDC)

Analog Resolution

• 14 bits

Communications

• HART (Generic - Universal Commands only)
• GoshawkII via HART. Full command list.

Blanking Distance

• 250 mm (10")

Maximum Range

• 12 metres (40ft)

Resolution

• 1 mm (0.04")

Electronic Accuracy

• +/- 0.25% of maximum range

Operating Temperature

• -40°C to 60°C (-40°F to 140°F)

Maximum Operating Pressure

• -0.5 to 3 bar (0 - 44 PSI)

Automatic Temperature Compensation

• Yes

Beam Angle

• 7°

Materials

• Transducer: PVDF
• Housing: Powder coated aluminum

Display

• 4 line graphic display (128 x 64)

Keypad

• 4 keys = CAL, RUN, UP, DOWN

Memory

• >10 years data retention

Enclosure Sealing

• IP67

Cable Entries

• M20 cable glands

Mounting

• 2" BSPT Thread
• 2" NPT Thread

Typical Weight

• 1kg (2.2 pounds)

Volume

• Pre-set common vessel shapes
• 32 point programmable linearization table
• Requires PC connection with GoshawkII software






HAWK
1-142

HAWK, Since 1988

Hawk Measurement Systems Pty Ltd (HAWK) was established in 1988. It's founding members saw the universal requirement of various industries requiring improved process control and efficiency in their operations.

We Can Help

HAWK understands the difficulties customers face when seeking accurate level measurement. Every application is different, involving a multitude of environmental factors. This is where HAWK excels. Our aim is to ensure that customers feel comfortable with our technology, and are provided with long term and reliable solutions. We believe that a combination of application and product expertise, as well as forward thinking and proactive support policies are the foundation of successful customer-supplier relationships.

Progressive Technical Support

HAWK believes that the future of the Level Measurement Industry revolves around the quality of pre and post sales - support. Our aim is for all sales & support staff to be product experts, and more importantly application experts making our customers applications as efficient and consistent as possible.

Remote Innovation

HAWK understands the need for immediate technical assistance.

The HawkLink 3G communication device allows any computer with internet access and our free GosHawk diagnostic & calibration software; to dial in, calibrate, test, and check the performance of HAWK products. This innovative system allows our Global Support Team to assist with commissioning and after sales service of HAWK equipment worldwide. Measurement problems are addressed as they happen; not days or weeks later.

Knowledge Sharing

HAWK believes that knowledge sharing is key to creating long term relationships. Empowering our customers and our worldwide distribution network, whilst being available at all times to lend a helping hand, is the perfect recipe for long-term solutions and relationships. HAWK openly extends an invitation to share our 25 years of level measurement experience, and ensure that your day-to-day processes are efficient, understood, and always working.

All company or product names are registered trademarks or trademarks of their respective owners.

Hawk Measurement Systems
(Head Office)
15 - 17 Maurice Court
Nunawading VIC 3131, AUSTRALIA
Phone: +61 3 9873 4750
Fax: +61 3 9873 4538
info@hawk.com.au

Hawk Measurement
96 Glenn Street
Lawrence, MA 01843, USA
Phone: +1 888 HAWKLEVEL (1-888-429-5538)
Phone: +1 978 304 3000
Fax: +1 978 304 1462
info@hawkmeasure.com

For more information and global representatives: **www.hawkmeasure.com**