A Higher Level of Performance

User Manual

Centurion

Guided Radar

HART



For more information, please visit >

www.hawkmeasurement.com

Contents

Overview 4
Principle of Operation 4
Function 4
Features 4
Primary Areas of Application 4
Wiring 5
Dual Chamber Housing 5
Single Chamber Housing 5
Dimensions 6
Dual Chamber Housing 6
Single Chamber Housing 6
Probe Variants 7
Centering Disc 8
Tank Fastening Socket for Rigid Probe 8
Tank Fastening Eye Bolt For Cable Weight 8
Measured Range Reference 9
Criteria For Interface Applications 10
Detached Probe Assembly 11
Assembling Detached Probe 11
Rope Weight 11
Assembling Segmented Probe 12
Safety Instructions 13
Hazardous Area Safety Instructions 13
SIL Safety Instructions 13
Installation Guide 14
Mounting - Instruction for Rotating the Unit 14
Conduit / Gland Entry Wiring 14
Preferred Mounting Connection 14
Mounting In Bypass Chambers 14
Placement Requirements 15
Stand Pipe / Flanged Mounting 16
Large Stand Pipe Mounts >300mm (12") 16
Mounting - Conductive Vessel 17
Mounting - Non Conductive Vessel 17
Securing The End of The Probe 17
Ideal Clearance to Vessel Wall 17
Flexible Probe Considerations 18
Hardware Adjustment 19
Adjusting Probe Length 19
Enclosure (Display) Orientation for Hazardous Rated Units 20
Enclosure (Display) Orientation for Non-Hazardous Rated Units 21
Forces On The Probe 22
Power Up Sequence 23
Quick Setup 24
Single Level Device & Common Steps For All Applications 24
Interface Level Additional Steps 27
Long Range / Low Dielectric Single Level Additional Steps 28
SIL Level Device Additional Steps 28

Software Parameters 29
Setup Menu 29
Advanced Menu 31
SIL Software Parameters 36
SIL2 Commission Menu 36
Interface Mode 37
Interface Mode Parameters 37
Detect Modes 39
Using Detect Modes 39
Functional Example 40
Mode Types 41
Displayed Information 42
Displayed Diagnostics 42
Additional SIL Displayed Diagnostics 42
HART 44
HART Information / DD 44
HART Variables 44
HART Universal Command List 44
HART Common Practice List 45
Status / Diagnostic Flags 45
Software Flow Chart 46
Software Flow Chart - SIL2 52
Troubleshooting 53
Failed codes 53
General Troubleshooting 54
Troubleshooting (con't) 55
Part Numbering 56
Centurion Guided Radar System 56
Flange Table 60
Mounting Flanges 60
Accessories 61
Specifications 62
Ordering Instructions 64







Principle of Operation

Guided-wave technology sends the radar pulse down a probe to measure either liquids, solids or a low dielectric to high dielectric Interface level.

The pulse hits the surface and / or Interface and is reflected back up the probe to the sensor, where the transit time is translated into a distance using time of fight and time expansion.

The amplitude of the reflection depends on the dielectric constant of the product.

Function

The HAWK range of Guided Radar products are ideal for the measurement of liquids, sludge, powders and granules to a range of 38m (124ft) for level and interface. This technology is not affected by pressure, temperature, viscosity, vacuum, foam, dust, changes in dielectric constant or coating of the probe.

Primary Areas of Application

- Chemicals
- Petrochemicals
- Cement
- Building Aggregates
- Mining / Minerals
- Food & Beverages
- Oil & Gas
- Pharmaceutical
- Pulp & Paper
- Wastewater

Features

- Hazardous rated IECEx, FM, CSA & ATEX Gas & Dust
- Safety rating to SIL2, SIL3 (multi channel)
- Interface Level measurement option
- Up to 38m (124ft) range
- Very short minimum range (≤150mm, 6")
- Simple setup
- Auto-Calibration to any dielectric ≥ 1.5
- Automatic Sensitivity control
- Precise & continuous accuracy
- 2 wire loop
- 4-20mA, HART 7
- Protection class IP66, NEMA 4x
- Measures extremely low dielectric (1.5)
- Programmable fail safe mode

Dual Chamber Housing

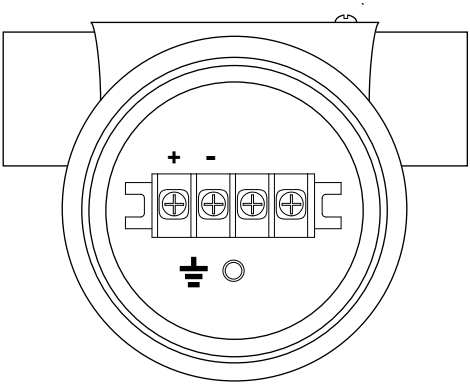

Single Chamber Housing

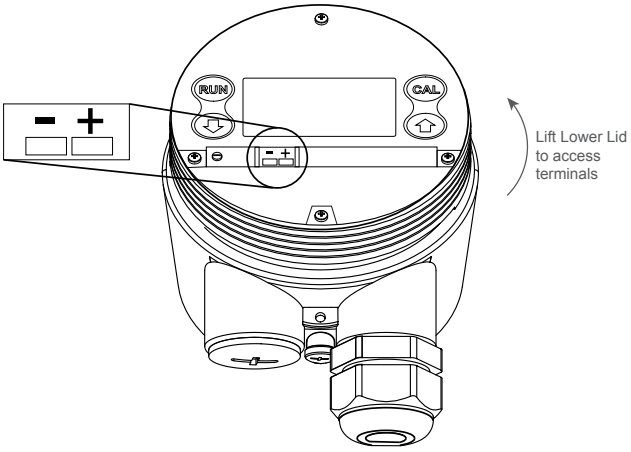

Dual Chamber Housing

Process Temperature
≤ 130°C (266°F)

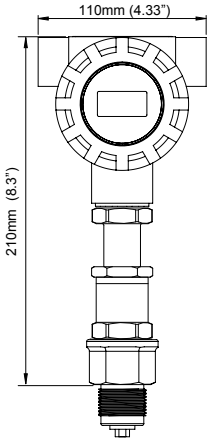

Process Temperature
150°C ≥ 250°C (302°F ≥ 482°F)

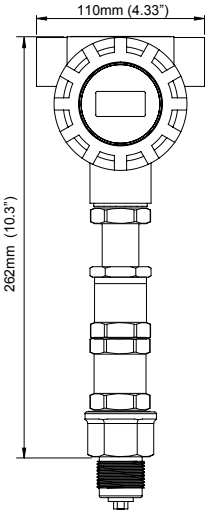

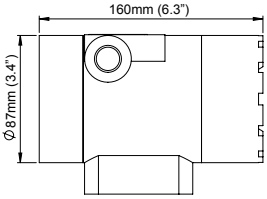

Single Chamber Housing

With Viewing Window

Process Temperature
80°C (176°F)

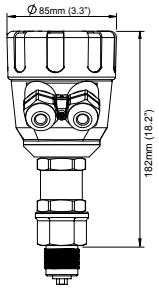

Process Temperature
130°C ≥ 250°C
(266°F ≥ 482°F)

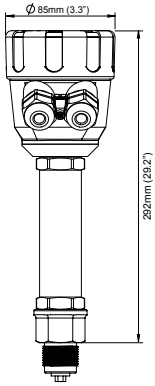

Without Viewing Window

Process Temperature
80°C (176°F)

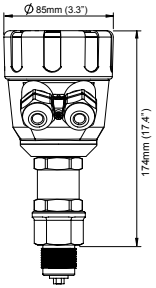

Process Temperature
130°C ≥ 250°C
(266°F ≥ 482°F)

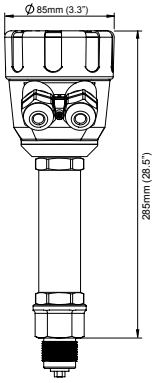

Probe Variants

A04 / A06 / A08 / J04 / J06 / J08

B04 / B06 / B08 / K04 / K06 / K08 / B11

Threaded

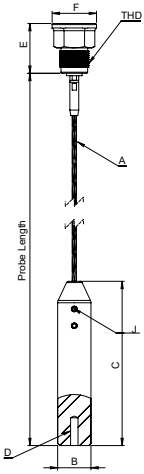

Flanged Bush

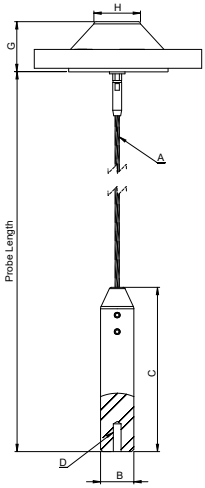

Threaded

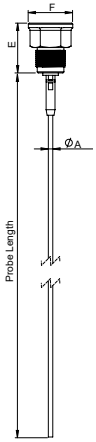

Flanged Bush

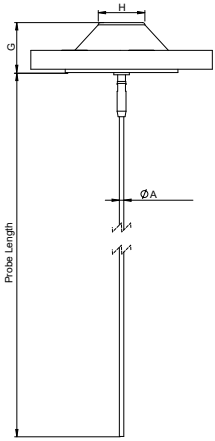

Probe / Cable Dimensions														
Probe Type	**THD BSP or NPT**	**A**		**B**		**C**		**E**		**F**		**D Internal Threads (A04, A06, A08 only)**	**J (Tightening Torque = 20Nm)**	
	in.	**mm**	**in.**	**mm**	**in.**	**mm**	**in.**	**mm**	**in.**	**mm**	**in.**		**Set Screw**	**Hex Key Size**
A04, B04, J04, K04	3/4	4	0.16	22	0.9	120	4.7	45	1.8	40	1.6	M10x1.25, 24mm deep	3x M8x1.25x12	4mm
A06, B06, J06, K06	1	6	0.24	28	1.1	150	5.9	45	1.8	40	1.6	M10x1.25, 24mm deep	3x M8x1.25x12	4mm
B11	1	11	0.43	N/A		N/A		N/A		40	1.6	N/A	N/A	N/A
A08, B08, J08, K08,	1-1/2	8	0.31	36	1.4	200	7.8	72	2.8	64	2.5	M10x1.25, 24mm deep	3x M10x1.5x18	5mm
	Flanged Bush	**G**		**H**										
		mm	**in.**	**mm**	**in.**									
A04, B04, J04, K04, A06, B06, J06, K06, B11		45	1.8	42	1.6									
A08, B08, J08, K08		72	2.8	70	2.7									

Centering Disc

Connects to base of Probe type B11

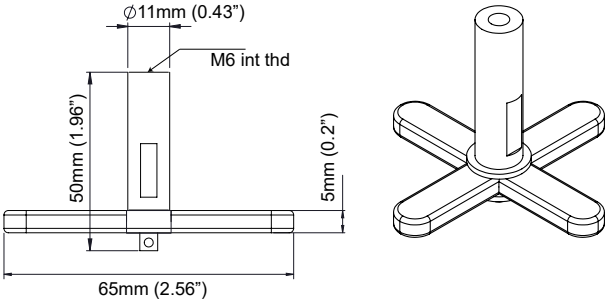

Tank Fastening Socket for Rigid Probe

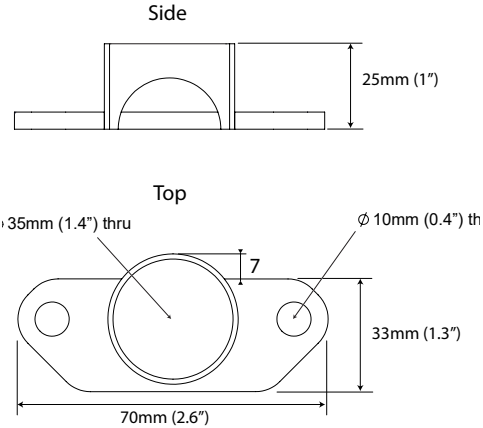

Tank Fastening Eye Bolt For Cable Weight

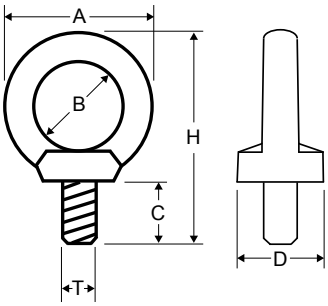

Dimensions	
T (thread)	M10
A	40mm (1.57")
B	25mm (0.98")
C	21mm (0.82")
D	20mm (0.79")
H	63mm (2.48")

Recommended Working Load	675kg (0.74 ton)
Total Deformation Load	2600kg (2.87 ton)
Weight	60g (0.13lb)

Measured Range Reference

A	Blanking (non-measurable zone)
B	Measurable Span (blanking to top of cable weight or end of rigid probe). High level must be = to or > than Blanking

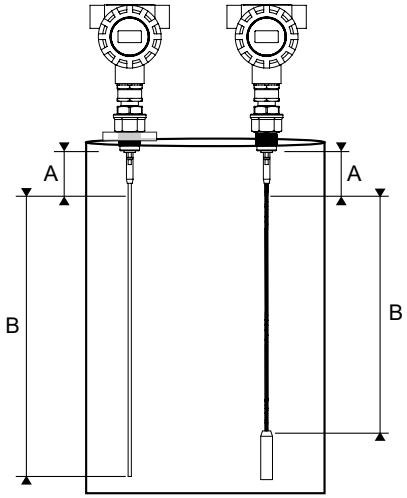

Minimum Recommended Range

Probe Variant	Distance
A04 / J04	150mm (6")
A06 / J06	150mm (6")
A08 / J08	150mm (6")
B04 / K04	150mm (6")
B06 / K06	150mm (6")
B08 / K08	150mm (6")
B11	150mm (6")

Maximum Range

Probe Variant	Distance
A04 / J04	38m (124ft)
A06 / J06	38m (124ft)
A08 / J08	38m (124ft)
B04 / K04	4m (13ft 1in)
B06 / K06	4m (13ft 1in)
B08 / K08	4m (13ft 1in)
B11	6m (19ft 8in)

Criteria For Interface Applications

Some general guidelines for Interface applications

- The dielectric of the upper layer must always be lower than the lower layer.
- The upper layer thickness should be larger than 200mm (8in), however smaller layers may be detectable.
- The maximum dielectric for the upper product should be 10.
- The difference between the dielectric constant values for the two layers must be larger than 9.
- The dielectric of the upper layer must be correctly programmed into the Dielectric parameter.
- Large mixed (emulsion) layers may result in the system being unable to detect the lower layer
- Foam may create measurement difficulties seeing one or both layers.
- The presence of an emulsion / mixed layer, or inaccuracies in the Dielectric selection may create small measurement errors. When selecting High and Low levels, ensure a safety margin is present to avoid the wrong layer accessing any out feed locations.

! Always use a Rigid probe type where possible for Interface applications. The cable weight of flexible probe units may interfere with measurements if the signal from the weight is detected, which can occur when the probe is covered *only* by a lower Dielectric material.

If a flexible cable probe is required, please consult with Hawk.

Assembling Detached Probe

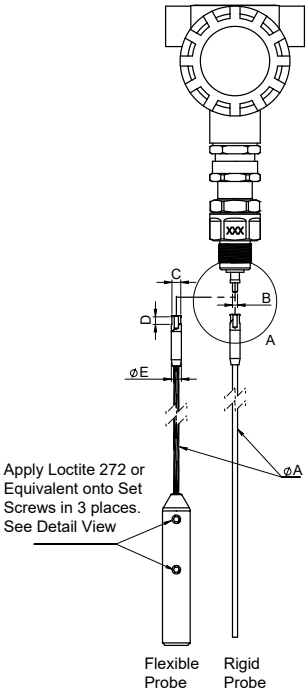

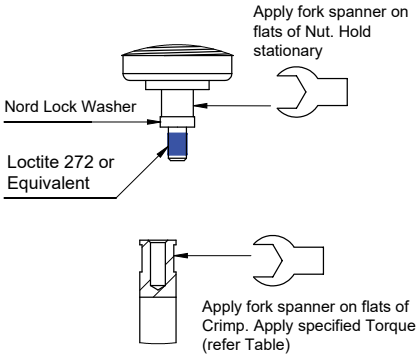

Rope Weight

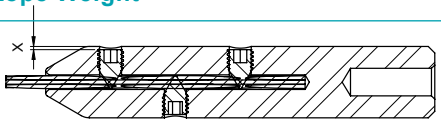

Note: Only Probes supplied by HAWK can be fitted in situ. Mounting of any other probe voids Hazardous Location Approval

Probe	Ø A(mm)	B(mm)	C(mm)	D(mm)	Ø E(mm)	T. Torque
J04, K04	4	M4	7	6	8	5 Nm
J06, K06	6	M6	10	6	11	10 Nm
J08, K08	8	M10	15	10	16	20 Nm
B11	11	M6	NA	NA	NA	10 Nm

Set Screws on Rope Weight

Probe	Set Screw	Length	X	Torque
J04, K04	3XM8X1.25	12mm	1mm	20 Nm
J06, K06	3XM8X1.25	12mm	3mm	20 Nm
J08, K08	3XM10X1.5	18mm	3mm	20 Nm

Assembling Segmented Probe

Center Nord Lock washers on Grub Screws

Apply Loctite 272 or Equivalent to grub screws

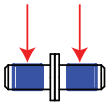

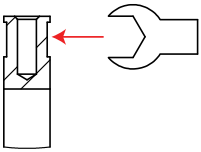

Assemble Probe Segments.
Apply fork spanner on flats of crimp only.
Apply 15 Nm Torque

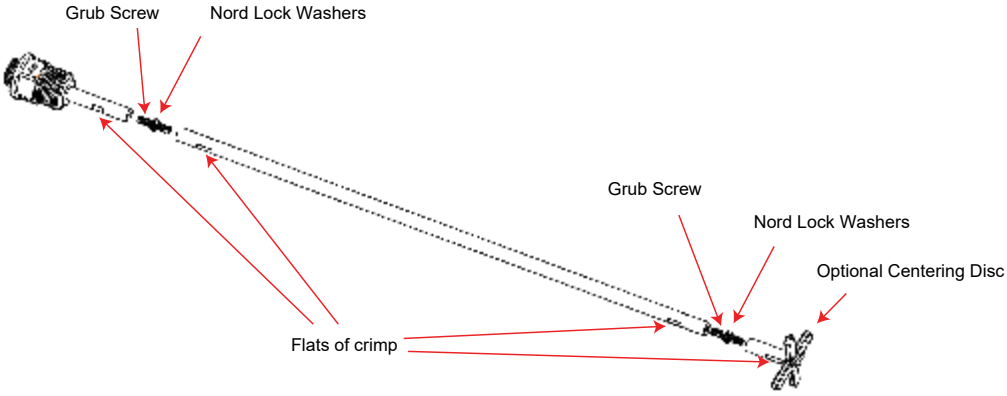

Hazardous Area Safety Instructions

! **Please consult relative Safety Instructions for critical information regarding rotating Hazardous Rated units located at:**
https://www.hawkmeasurement.com/downloads/safety-instructions/

SIL Safety Instructions

! **Please consult SIL Safety Instructions for critical information regarding setup & commissioning of SIL installations located at:**
https://www.hawkmeasurement.com/downloads/safety-instructions/

Mounting - Instruction for Rotating the Unit

There are specific rotation points which should be used while mounting the unit into place.

The Housing Compartment should never be used to rotate the device during mounting.

For rotating the housing after installation see 'Rotating the Enclosure' section.

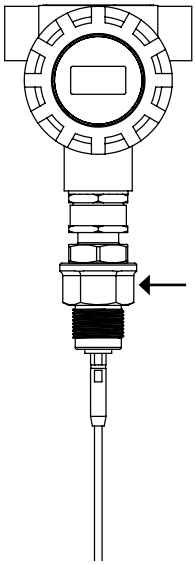

When Installing the CGR unit, use spanner or wrench ONLY at Process Fitting as indicated.

Conduit / Gland Entry Wiring

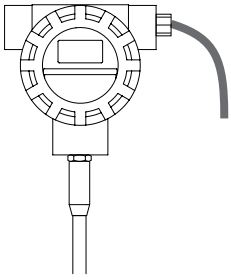

Wire at gland entry must angle down

Preferred Mounting Connection

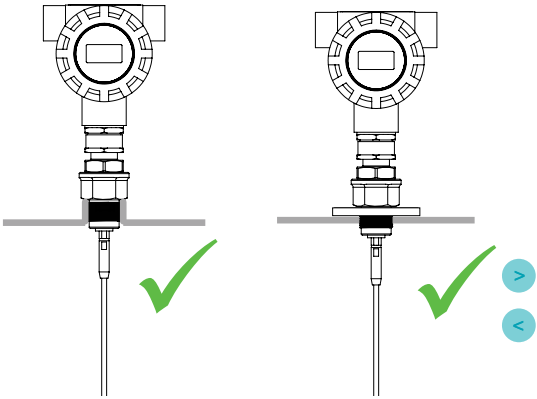

Flush mount to vessel ceiling via socket or flange

Mounting In Bypass Chambers

Use a centering disc in bypass chambers to prevent probe from making contact with the side walls

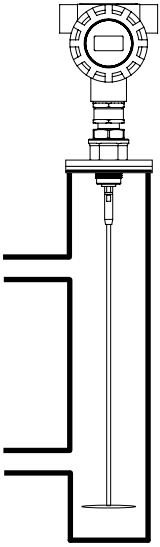

Placement Requirements

Do NOT mount near in feed

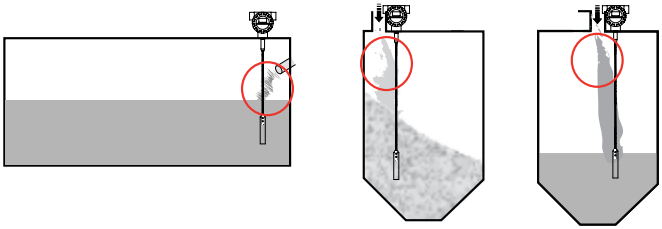

Do NOT mount over or adjacent to any obstacles

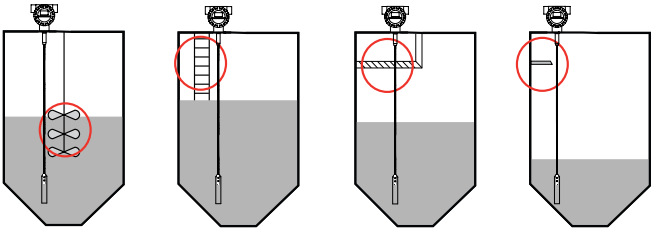

Mount AWAY from in feed

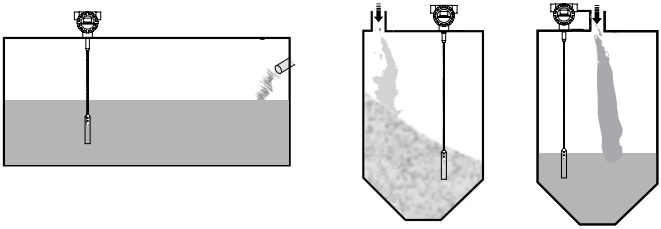

Mount AWAY from any obstacles by >400mm

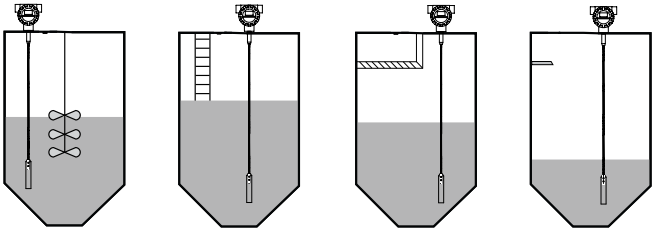

Stand Pipe / Flanged Mounting

1

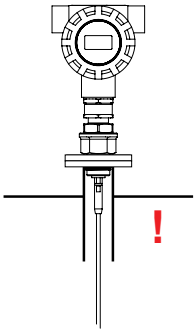

2

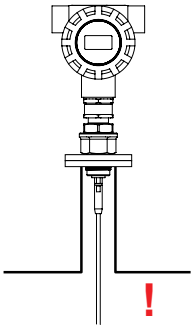

1. Stand pipes protruding into vessel may cause signal interference. ! Digitization and / or Blanking Distance must be adjusted to avoid measurement issues. A Centering Disc should be considered if there is any chance the probe may make contact with the stand pipe

2. Long / narrow stand pipes may cause signal interference. ! Digitization and / or Blanking Distance must be adjusted to avoid measurement issues.A Centering Disc should be considered if there is any chance the probe may make contact with the stand pipe

3

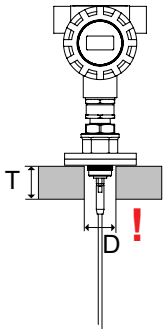

3. Roof Thickness (T) should not exceed Diameter (D) of cut away. ! Digitization and / or Blanking Distance must be adjusted to avoid measurement issues

Large Stand Pipe Mounts >300mm (12")

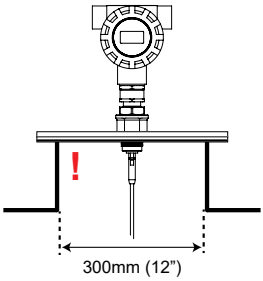

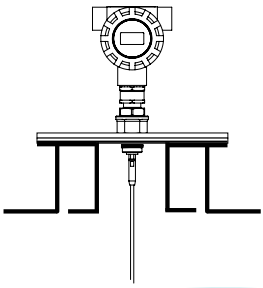

Stand pipes >300mm (12") can create near range measurement difficulties. Avoid if possible, nozzles, or install a smaller stand pipe within the larger one. For example a 150mm (6") stand pipe within a 12" (300mm) stand pipe.

! Digitization and / or Blanking Distance must be adjusted to avoid measurement issues

Mounting - Conductive Vessel

Guided Radar functional performance is most optimized when there is a ground reference between the mounting (metal flange or thread) and the vessel. Metallic or metal reinforced vessels are ideal.

Mounting - Non Conductive Vessel

A non conductive vessel (plastics for example) will require a metal flange or equivalent piece of metal at least 200mm (8") making direct contact to the threaded bushing. This will allow measurement up to 10m (32ft). For applications between 10m (32ft) and 20m (64ft) the Dielectric of the measured material must be greater than 10. For applications longer than 20m (64ft) please contact your local Hawk representative.

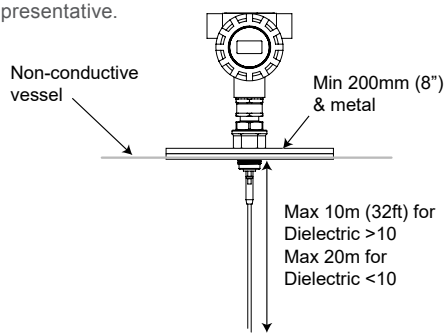

Ideal Clearance to Vessel Wall

Vessel Type	C (Clearance)
Metal with Smooth Walls	100mm (4")
Metal with Interfering structures (eg pipes, cross beams, ledges)	400mm (16")
Plastics, Concrete with low Dielectric measured product (Dk 1.5 to 10)	500mm (20")

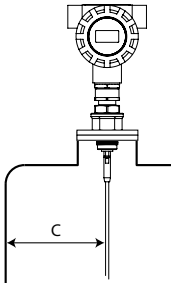

Securing The End of The Probe

• If there is risk of excessive lateral forces, secure a rigid type probe using a socket

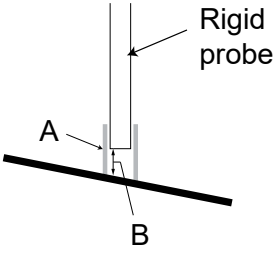

A	Socket
B	Clearance. Min 2" (50mm)

• For flexible probes, the cable weight can be removed and the cable itself can be used to anchor through eye bolt or similar and clamped back to secure the loop. Alternatively an Eye bolt can be connected to the Weight & vessel floor. The weight includes an M10 threaded connection on the base.

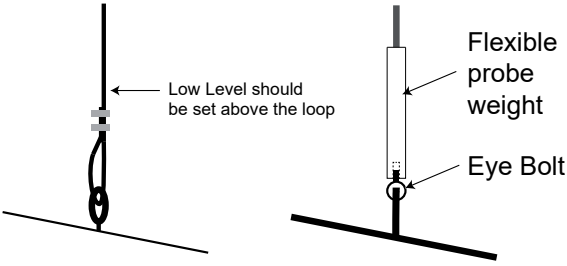

Flexible Probe Considerations

- Avoid mounting adjacent to internal structures (eg ladders, walkways). The cable must not make contact with any part of the vessel
- Take into consideration that material forces may push probe laterally. Secure Cable Weight to the vessel

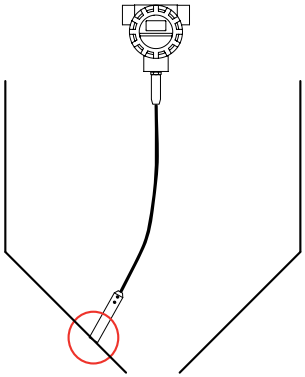

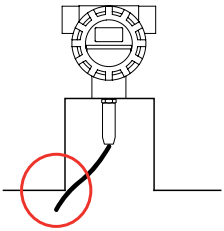

- Avoid cable sway / movement in within nozzles

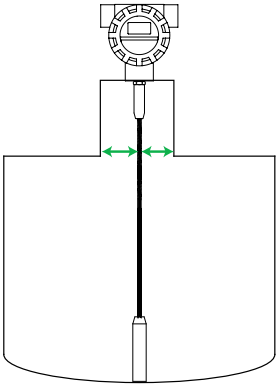

- Ensure the flexible probe length is not too long, this may generate measurement errors and false readings. See 'Hardware Adjustment' for instruction to adjust probe length

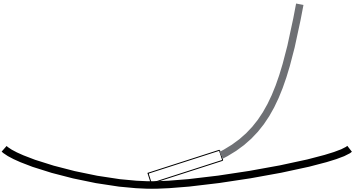

Adjusting Probe Length

Rigid Probes

Cut rigid probes to appropriate length. After adjustment and If no material is making contact with the probe, run the 'CalibrateEnd' function in the 'ProbeCalibr' menu (password 222) and the unit will automatically detect and display the probe length.

If material is touching the probe, adjust the 'ProbeLength' Parameter in 'Advanced / ProbeCalibr' menu to represent the new length (password 222).

Flexible Probes

(a) Mark the point at which the flexible cable enters the cable weight.

(b) Release the cable weight grub screws with hex key.

(c) Measure and note the length of cable concealed within cable weight.

(d) Cut cable noting the length of cable must include the concealed length above.

(e) Re-insert the cable into the weight and tighten grub screws to tightening Torque of 20Nm.
Use loctite 243 or equivalent on grub screws to secure once completed.

(f) After adjustment and If no material is making contact with the probe, run the 'CalibrateEnd' function in the 'ProbeCalibr' menu (password 222) and the unit will automatically detect and display the probe length.
If material is touching the probe, adjust the 'ProbeLength' Parameter in 'Advanced / ProbeCalibr' menu to represent the new length (password 222).

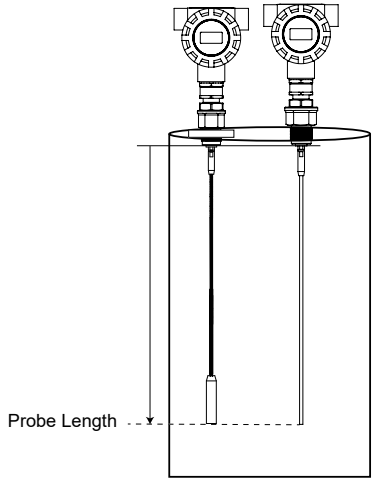

Enclosure (Display) Orientation for Hazardous Rated Units

Please consult relative Safety Instructions for critical information regarding rotating Hazardous Rated units located at:
https://www.hawkmeasurement.com/downloads/safety-instructions/

Enclosure (Display) Orientation for Non-Hazardous Rated Units

The conduit fitting which couples the sensing probe to the enclosure provides a Union Joint which is designed to rotate.

However this rotation is limited to one-time adjustment of Display orientation after installation on site, as shown below:

ONLY one 36mm spanner applied to the Hex of Union Joint to rotate enclosure to desired orientation as allowed. DO NOT hold the enclosure during this procedure.

As Installed, but LCD display not visible.

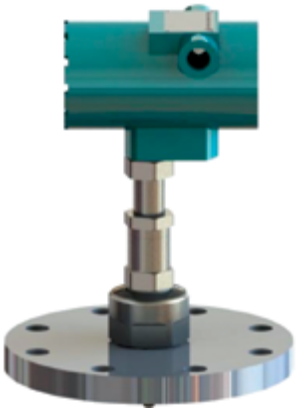

Rotation at Union Joint

Max 360° allowable one-time rotation in either direction.



Desired Orientation.



Rotation beyond these strict limits can damage the internal cables

Ensure Enclosure follows the spanner rotation and assembly integrity is not compromised

Forces On The Probe

Tensile forces are heavily dependent on the viscosity and abrasive characteristics of the product in the vessel. Ensure tensile loading is appropriate for the selected cable as well as the silo cover and mounting structure. In critical cases it is better to select the larger flexible cable (8mm).

Probe Type	Tensile Load
A04 / J04 (4mm flexible cable @ 20°C, 68°F)	0.5 Ton
A06 / J06 (6mm flexible cable @ 20°C, 68°F)	1.0 Ton
A08 / J08 (8mm flexible cable @ 20°C, 68°F)	4.0 Ton

Lateral forces can exist due to movement and gradual flow of the product in the vessel, particularly with powder and granular materials.

These forces can cause stress and strain on the probe, as well as the process fitting and mounting hardware. Ensure that lateral forces are minimized by following the installation guidelines and Placement Requirements.

Probe Type	Lateral Load
B04 / K04 (4mm rigid probe @ 20°C)	1 Nm
B06 / K06 (6mm rigid probe @ 20°C)	3 Nm
B08 / K08 (8mm rigid probe @ 20°C)	8 Nm
B11 (11mm rigid probe @ 20°C)	11 Nm

Installation should only be performed by suitably qualified personnel.

A. Confirm mounting is within recommended specifications.

B. Check the selected unit matches the required application specifications.
For Hazardous Locations see appropriate safety instructions available at http://www.hawkmeasurement.com

C. Check the wiring is correct and all connections are secure.

D. Apply power to the unit.

When power is applied the unit will start its normal load sequence.
The following messages will cycle on the display.

Hawk
CGR Series
Serial Number
Software Revision

Menu Navigation

1 Navigate up, increase value

2 Navigate down, decrease value

3 CAL Proceed, select, save

4 RUN Go back, return unit to operational mode

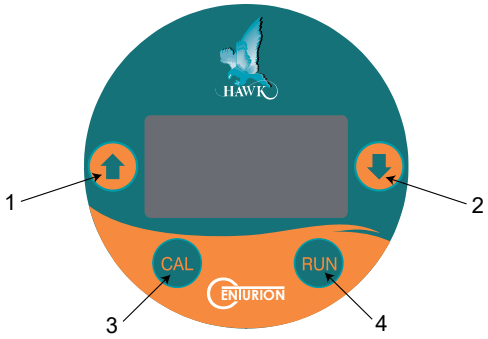

Most of the applications can be commissioned and installed by following steps. For details regarding all adjustable parameters please refer to Menu Sections

Single Level Device & Common Steps For All Applications

1. Calibrate Probe Length

Menu Path: Advanced > ProbeCalibr (password 222)

a) Probe Length: If physical length of probe is adjusted you must adjust the Probe Length parameter to match the new length. You can also use the CalibrateEnd function below. For flexible cable probes, the probe length includes the cable weight

b) ProbeEndTied: If end of Probe is tied / secured to the vessel, select Yes. If the probe end is free hanging / open / not making contact with the vessel, select No

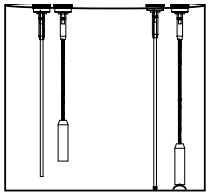

Open Probe Example

Tied Probe Example

2. Set Span: High and Low Level

Menu Path: Setup > High Level
Menu Path: Setup > Low Level

a) Set the Distance to the High (100% / full) and Low (0% / empty) level. The Distance is measured from the base of the unit thread

3. Set Blanking:

Menu Path: Advanced > Blanking

a) A typical Blanking distance should be 50mm (2") less than the High level.

The recommended minimum Blanking is 150mm (6"). If using less than this value, consult with Hawk.

If the level enters the Blanking distance, the unit will no longer report an accurate measurement and may read a double bounce, showing double the distance of the actual level

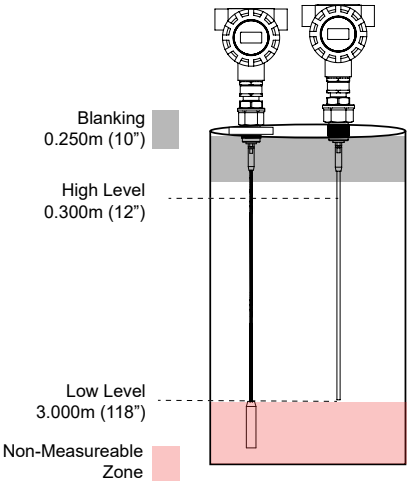

High, Low and Blanking Example

3. Set Tracking Speed:

Menu Path: Setup > Tracking

Fast: Max.500mm/sec (18”)

Medium: Max 300mm/sec (12")

Slow: Max 150mm/sec (6")

InstaTrack: A special mode which we respond immediately to any detected reflection.

See Tracking for additional information

4. Set Dielectric:

Menu Path: Setup > Dielectric

Select Dielectric value. Select lower value if unsure. Applications in narrow metal chambers (such as bypass chambers) will generate a strong signal, so a lower Dielectric selection may be possible.

5. Set Digitize Map

Menu Path: Setup > Digitize

The 'Digitize' function is an automatic setup routine to create a digital map of false echoes generated by problems such as non-recommended mounting.

The function should be performed after physical installation to the application and while the lids are closed.

For Low Dielectric applications, it is recommended to Digitize with the process material as close to the Low Level as possible

During the process the unit will display a measured distance. This will be either the material level if material is touching the probe, or end of probe of the vessel is empty. For **Interface** model type it should be the Upper Layer). If there is material in the vessel, verify this distance is correct.

If the distance is a false echo, increase the Digitize distance to eliminate the false echo as a target.

The unit will prompt with a count down timer to close the lid before performing the routine.

Typical Digitization Recommendations

For flush roof mount, Digitize to the greater value of either 300mm (12") or the Distance to the High Level parameter.

For Nozzle mount, Digitize the total Height of the nozzle plus additional 300mm (12")

Flush Mount

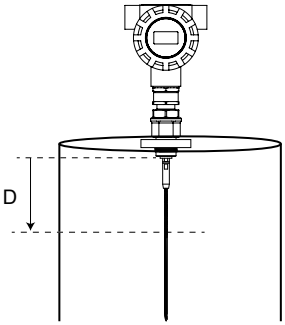

D (Digitized Distance)
= The greater of 300mm (12") OR Distance to High Level

Nozzle Mount

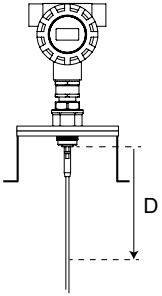

D (Digitized Distance)
= Height of Nozzle + 300mm (12")

7. Run Unit

Press RUN several times to commence unit operation

8. Setting / Verifying Sensitivity%

Menu Path: Advanced > Check Echoes
Menu Path: Advanced > Sensitivity

a) Only run when material is touching probe in measurable zone

b) Best results are achieved if function is performed when level is near empty

The Check Echo function find two largest echoes and displays the minimum Sensitivity% required to detect them. The largest echo is listed first. The difference between Sensitivity% of two echoes indicates noise margin. ***The measurement can be unreliable if the difference is less than 5%***

Set Sensitivity to the detected Sensitivity% plus 10% safety margin.

Note: Sensitivity can be set higher to compensate for attenuation losses, if check echoes is performed at higher material level.

See Check Echoes for further information

Interface Level Additional Steps

1. Setting / Verifying Span: Hi and Low Level

Menu Path: Setup > High Level
Menu Path: Setup > Low Level

Verify the High and Low level values are correct for the Interface application

A	Distance - measured from base of thread or bottom of flange to material level
B	Level - measured from Low level to material level
C	% Level - proportional percentage of measured level based on Low and High level setting

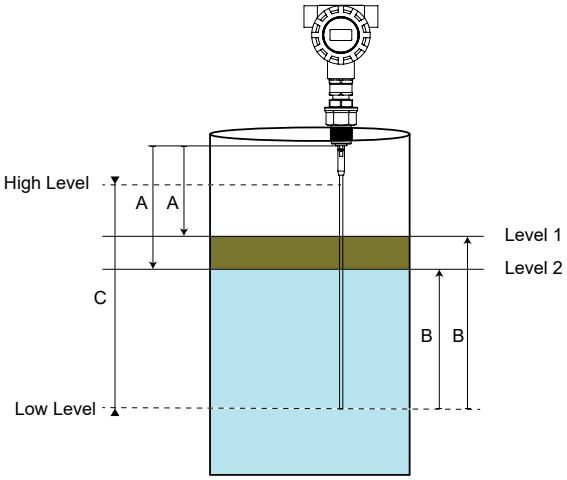

2. Setting / Verifying Sensitivity%

Menu Path: Advanced > Check Echoes
Menu Path: Advanced > Sensitivity

Run Check Echoes

c) Only run when Level 1 Material is touching probe in the measurable zone.

d) Best results are achieved if function is performed when level is near empty

The Check Echo function find two largest echoes and displays the minimum Sensitivity% required to detect them. The echo detected must be the Upper Layer / Level 1. The difference between Sensitivity% of two echoes indicates noise margin. ***The measurement can be unreliable if the difference is less than 5%***

Set Sensitivity to the detected Sensitivity% plus 10% safety margin.

Note: Sensitivity can be set higher to compensate for attenuation losses, if check echoes is performed at higher material level.

3. Set Sensitivity2

Menu Path: Setup > Interface > Enable > Sensitivity2

Set Sensitivity2 to be **10% Less** than Sensitivity

4. Set Failsafe 2

Menu Path: Setup > Interface > Enable > Failsafe 2

Set Failsafe condition for the Lower Layer / Level 2

5. Run Unit & Verify Levels

Press Run several times to commence unit operation. Confirm Upper and Lower Layers are present in the application and confirm the measured readings are correct

Long Range / Low Dielectric Single Level Additional Steps

1. Set Detect Mode

Menu Path: Advanced > Detect Mode

Select Detect Mode 1

See Detect Modes for additional information.

Note: If the Dielectric parameter is adjusted during this process, the Sensitivity parameter must be re-adjusted to value detected during the Check Echoes process.

SIL Level Device Additional Steps

1. Verification & Commissioning

Menu Path: SILCommission

For SIL Devices, ensure the verification and commissioning steps are followed as per the SIL safety manual located in https://www.hawkmeasurement.com/downloads/safety-instructions/

Setup Menu

Main Menu
▸ Setup
Advanced
Autoset

(2) Volume activation requires GosHawk. See dedicated CGR GosHawk manual.
(3) Units with Interface software option only

Parameter	Description	Options
Display Mode	Select default Display mode	• Volume[2] • Level •%Level Distance
Display Unit	Adjust displayed measurement unit	• Centimeters • Metres • Feet • Inches
Low Level	Set Low Level (4mA) distance	• Adjustable
Hi Level	Set High Level (20mA) distance	• Adjustable
Damping	Adjust output response time & smoothness	• Adjustable
Digitize	The 'Digitize' function is an automatic setup routine used to eliminate false reflections. For optimum performance the unit lids must be closed. See 'Digitize Function' for further information.	• Yes • No • Disable
Tracking	Program application process speed. **Fast:** Maximum 500mm/sec (18”) within a distance of 500mm (18”) of the last echo. If the unit has lost tracking the echo, the unit increases it’s search radius by 37.5mm/sec. Damping: 5 **Medium:** Maximum 300mm/sec (12") within a distance of 300mm (12”) of the last echo. If the unit has lost tracking the echo, the unit increases it’s search radius by 6.25mm/sec. Damping: 20 **Slow:** Maximum 150mm/sec (6") within a distance of 150mm (6”) of the last echo. If the unit has lost tracking the echo, the unit increases it’s search radius by 1.56mm/sec. Damping: 50 **InstaTrack:** A special mode which we respond immediately to any detected reflection. Damping: 2 **Test:** Adjusts unit function to be suitable for bench testing and demonstration. The unit will track nearest detected reflection regardless of size. *Note: The device may not respond to level changes and enter Failsafe condition if Tracking selection slower than the process speed.*	• Fast • Medium • Slow • InstaTrack • Test

Dielectric	Applies a pre-set value to Sensitivity% based on selected Dielectric Constant of material. If Dielectric is unknown, select a generally lower value and manually adjust Sensitivity% as required. If material is touching the probe, see 'Check Echoes' function to assist with setup. If using Detect Modes 1 or 2, this value must be accurate as the system uses it for part of its software algorithm. For Interface applications, Dielectric value must be accurate as it is used to calculate the time of flight compensation. For single level applications the Dielectric value applies a designated Sensitivity% used to detect echoes. If material is touching the probe, see 'Check Echoes' function to assist with setup.	• Adjustable
Interface[3]	Enable / Disable Interface measurement mode. See 'Interface Mode' section for more information.	• Enable / Disable
Fail Mode	Set Analogue failsafe output. (not available for SIL devices)	• 3.50mA • 3.80mA • > 20.20mA • LastKnown • 4mA • 20.00mA > 21.50mA
Fail Time	Set time delay for FailSafe condition (in seconds). (Not available for SIL devices).	• Adjustable

Advanced Menu

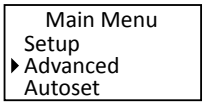

Parameter	Description	Options
Comms	Adjust communication protocol settings. The default ID is 0, and the default baud rate is 1200.	• Device ID • Baud Rate
Blanking	Blanking is a non-measurable zone. This can be increased to 'Blank' out high level false echoes caused by mounting. If the level enters the Blanking distance, the unit will no longer report an accurate measurement and may read a double bounce, showing double the distance of the actual level. The High level and Blanking distance should be separated by a safe margin based on the application.	• Adjustable <150mm (6") is not recommended
Check Echoes	The unit will scan and display the distance to the 2 largest echoes and the minimum % Sensitivity required to detect them. 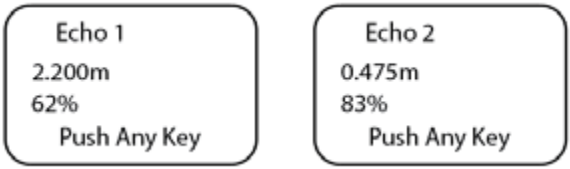 In the above Check Echoes example, where Echo 1 is the correct level reading and Echo 2 is a false reading from a nozzle or similar: Set Sensitivity% to 62 + 10 safety margin for a total of 72%. As Check Echoes displays 2 echoes, it can also be used to give an indication of the Sensitivity% where a false echo is detected. The user can then adjust the Sensitivity% to be in a safe range between what is required for material level echo and a false echo.	

Advanced Menu

Sensitivity	Manual adjustment of Sensitivity. Dielectric selection automatically sets this value to defaults based on the Dielectric selection. Sensitivity is the primary adjustment for the unit's ability to detect media. A higher value is used for lower Dk materials or more difficult applications.	• 0-100
OffsetDist	Add or a subtract an offset distance to the measured output	• Adjustable
ProbeCalibr Password protected (222)	• Probe Length If physical length of probe is adjusted you must adjust the Probe Length parameter to match the new length. You can also use the CalibrateEnd function below.	• Adjustable
	• ProbeEndTied ProbEndTied tells the unit whether the Probe End is tied / secured to the vessel or not. If the probe is tied to the vessel, select 'Yes (Tied)', if not, select 'No (Open)'. 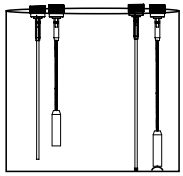 Open Probe Example Tied Probe Example **If an incorrect setting is selected, it may result in a Probe Error.**	• No (Open) • Yes (Tied)
	• CalibrateEnd CalibrateEnd is used to detect the Probe Length. After finished scanning, it will display the detected Probe End. The value can be manually adjusted. If the value is too long, it may result in a Probe Error. The detected length may have a slight inaccuracy.	
ProbeFault	Probe Fault will activate Failsafe in the event of a missing Probe	• Enable / Disable
Dist Calibr	Calibrate distance correction factor. Some applications or environments can affect time of flight signal travel affecting the measured distance reading. This function allows the detected distance to be adjusted to suit the application.	• Adjustable

Advanced Menu

Analog	Adjust Analog output. Switch from 4-20mA to 20-4mA Fine tune both 4mA current and 20mA current reading Park (Lock) Current to 4, 8 or 12mA. (not available for SIL devices)	• 4-20 • 20-4 • 4mA tuning • 20mA tuning • Park 4/8/12mA
Scope	Allows viewing of a scope type live signal trace. Scope Sens adjusts the amplification of the visible trace where 0 is the most amplification	Scope View Scope Sens
Factry Reset	Restore all parameters to factory default.	• Yes / No
Device Info	Display device information	
Lock Code	Enable / Disable lock code. If enabled, select lock code number.	• Enable / Disable
Flip LCD	LCD orientation set depending on housing type. Adjustment not required.	

Advanced Menu

Detect Mode	Detect modes are additional software functions which can be activated for certain types of applications. They are aimed at long range, low dielectric powder / bulk solids applications where a flexible cable probe with weight is being used. If using Detect Modes 1 or 2, the Dielectric parameter must be accurate to ensure accurate measurement of the material at long range Mode 1: Adds Variable Sensitivity, Covered Probe Echo Prediction, Covered Probe Tracking Window Prediction Mode 2: Adds Variable Sensitivity, Covered Probe Echo Prediction Mode 3: Adds Variable Sensitivity (suitable for all applications) Modes 4 & 5: Digitize Transition Smoothing (a diagnostic mode for Advanced Hawk users). See 'Using Detect Modes' section for further information	• 1 • 2 • 3 • 4 • 5
Low Sens End / LoSensitivity	Low Sens End works in tandem with LoSensitivity. This allows a control for the maximum amount of Sensitivity the unit can apply at close range. The distance (measured from mounting bush / flange down) is set using Low Sens End and the % Sensitivity is set using LoSensitivty. Long range, low dielectric applications may require a higher Sensitivity value which potentially creates problems at close range (due to obstacles / non confirming mounting). These parameters allow the user to set a maximum Sensitivity value to ignore these problems.	• Adjustable (Distance) • Adjustable (%)

Advanced Menu

Illustrated Example - Low Sens End set to 1m (3ft), LoSensitivity set to 70%

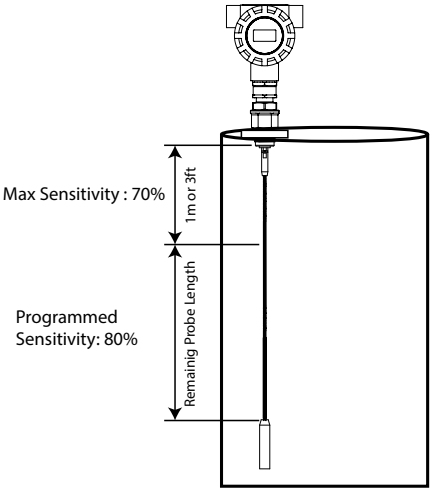

ProbeEnd(mV)	Sets the minimum signal size accepted as the end of probe echo. The default is 200mV. This value can be increased when using Detect modes 1 and 2 as when material begins to cover the probe, the end of probe echo will get smaller allowing the modes to activate sooner. Goshawk scope mode or LCD scope trace can also be used to visually check.	• Adjustable (mV)

SIL2 Commission Menu

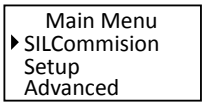

Please consult SIL Safety Instructions for critical information regarding setup & commissioning of SIL installations located at:
https://www.hawkmeasurement.com/downloads/safety-instructions/

Interface Mode Parameters

Interface mode is only available with the Interface communications option (see Part Numbers).

The Interface mode is designed to measure applications with low to high dielectric constant layers.

The transmitted signal reflects off the Upper Layer and continues through the Interface and reflects from the Lower Layer.

The unit provides a level reading for both the Upper and Lower Layers available via HART. By default the Upper Layer will be transmitted to the 4-20mA output. This can be changed to the Lower Layer using the Intrfc2an parameter.

When Interface mode is Enabled, additional parameters are adjustable.

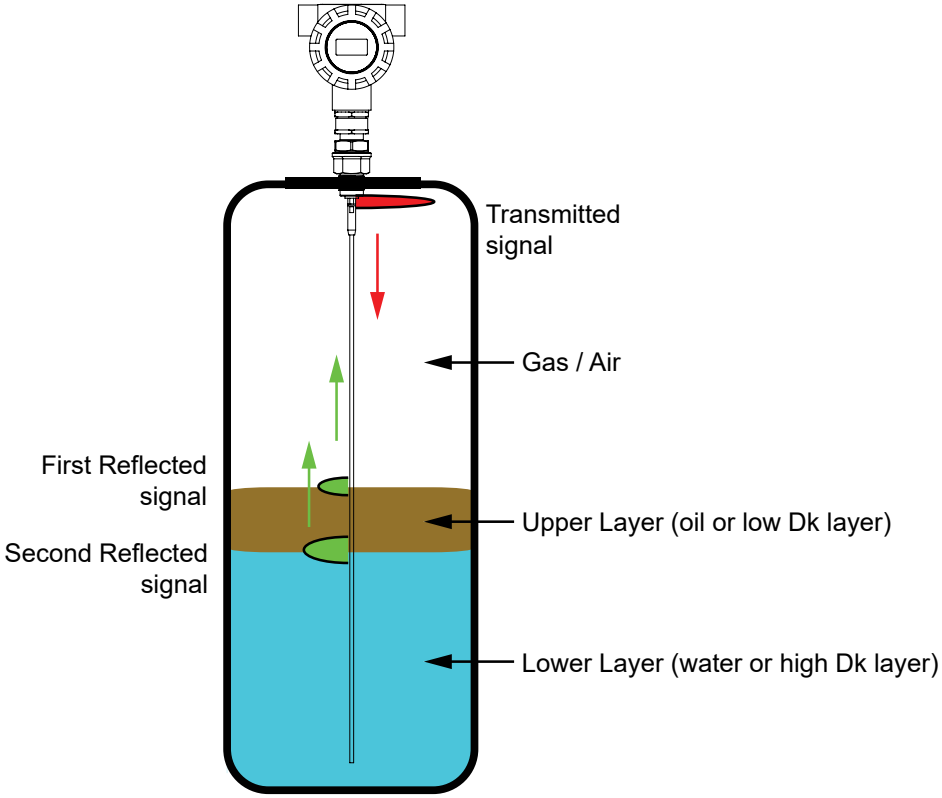

Parameter	Description	Options
Sensitivity2	Sensitivity2 is used by the Interface algorithm for the 2nd level and mixed layer conditions. The echo size of the 2nd layer (typically water) will always be much larger than the 1st layer, hence this Sensitivity2% must be lower than the primary Sensitivity%. The unit cycles detecting between Sensitivity and Sensitivity2 automatically while running.	• Adjustable
IFace Width	Set water reading (level 2) offset in the event of a merged echo. A merged echo will occur if the interface is too thin to produce a separate echo. The offset is measured from the end of the merged echo backwards. Default 150mm (0.5ft) *Note: This is an advanced setting and should not be adjusted without expert knowledge*	• Adjustable
IFace Size	Sets the echo size (in signal voltage) to dictate whether an echo is from the Interface or Level. If the echo is larger than the value the unit will assume no Interface is present and will set Level 1 reading to be the same as Level 2 reading. If the echo is smaller it will assume there is only an Interface layer measurable and will set Level 2 to end of probe measurement. Default 2.34 *Note: This is an advanced setting and should not be adjusted without expert knowledge*	• 0-2.49
Intrfc2an	Change 4-20mA output to transmit the 2nd level (interface) reading instead of the 1st.	• Disable • Enable
Failsafe 2	When Interfc2an is enabled unit will activate failsafe condition by the 2nd level / interface level, such as when no layer is detected or when Interface has become excessively mixed / emulsion. SIL units are locked at >21.5mA	• 3.50mA • 3.80mA • > 20.20mA • LastKnown • 4mA • 20.00mA > 21.50mA

Using Detect Modes

Detect modes are additional software functions which can be activated for certain types of applications. They are aimed at long range, low dielectric powder / bulk solids applications where a flexible cable probe with weight is being used.

There are 3 functions available within the Detect Modes in different combinations.

(a). Variable Sensitivity.

This allows the system to dynamically adjust the Sensitivity% based on the detected echo size. If conditions change and the echo becomes too small, the unit will automatically increase Sensitivity% to retain a good signal.

Alternatively, if the Sensitivity% is too high, the unit will reduce the % which reduces the possibility of detecting false and unwanted signals.

Over longer ranges, the signal size will reduce. This function allows the unit to automatically compensate for the change.

(b). Covered Probe Tracking Window Prediction.

In low dielectric, long range applications with a cable weight small amounts of material may not create a signal larger than the cable weight at the end of the probe. However when this mode is activated, the unit uses the Dielectric of the material (via the Dielectric parameter) to calculate where the level should be based on the delay in time-of-flight to the cable weight.

The system uses this information to position the internal Tracking Window over where the material level will be. When the material level signal becomes larger than the cable weight, the unit is prepared to immediately begin measuring the level.

(c). Covered Probe Echo Prediction.

This mode is specific for use in Goshawk. This will activate a simulated echo at the distance the unit expects the level to be using the information detailed in (b) Covered Probe Tracking Window Prediction.

Functional Example

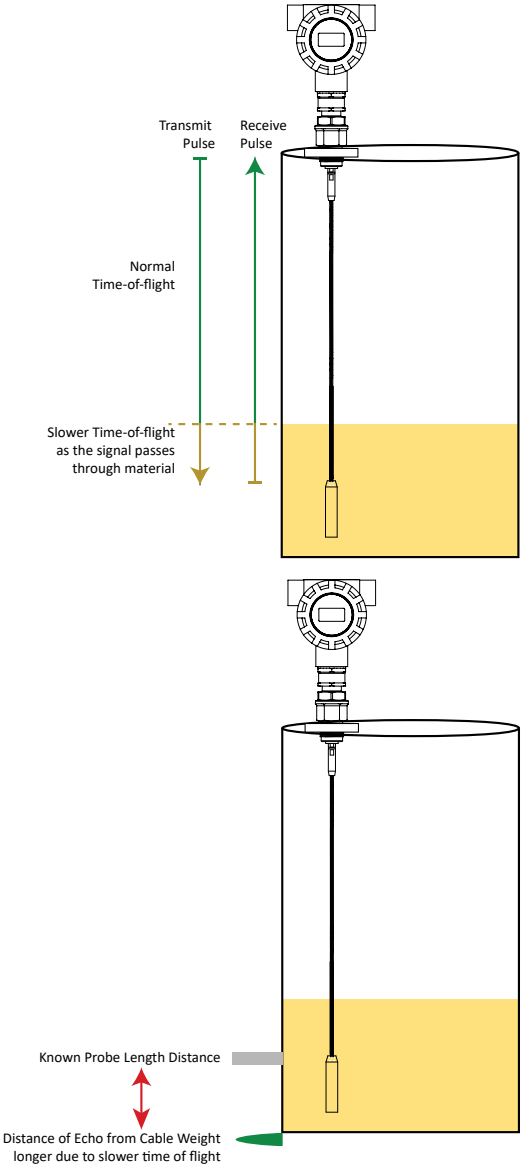

Functional Example

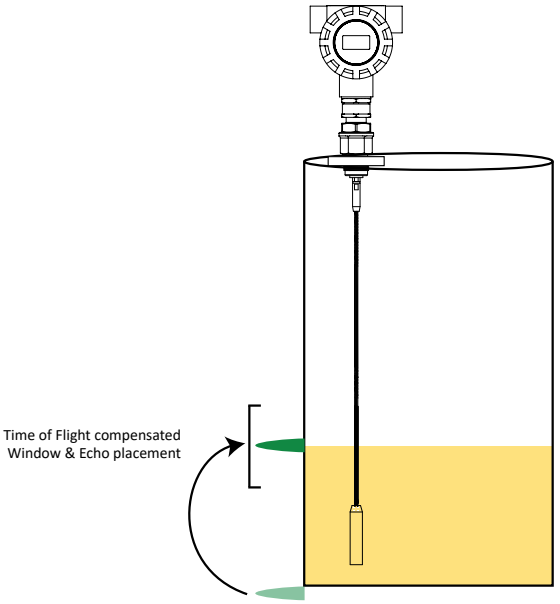

Mode Types

If using Detect Modes 1 or 2, the Dielectric parameter must be accurate to ensure accurate measurement of the material at long range

Mode 1:

Adds Variable Sensitivity, Covered Probe Echo Prediction, Covered Probe Tracking Window Prediction

Mode 2:

Adds Variable Sensitivity, Covered Probe Echo Prediction

Mode 3:

Adds Variable Sensitivity

Modes 4 & 5 are special Diagnostic modes for Hawk Engineers.

Displayed Diagnostics

While pressing the arrow buttons the top corner of the display cycles through various unit diagnostics

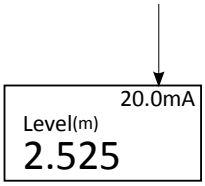

mA	Simulated current output in mA
Normal	Unit operating normally
Failed	Unit in failsafe condition
Recover	Unit searching for level / attempting to amplify signal
(1)Level - 1	Upper Material Level measurement
(1)Level - 2	Lower Material Level measurement

(1)Interface mode is only available with the Interface communications option (see Part Numbers)

Additional SIL Displayed Diagnostics

SILEnable	SIL mode enabled
SILDsable	SIL mode disabled

Displayed Measurements - Level

Measured Span Reference

A	Distance - measured from base of thread or bottom of flange to material level
B	Level - measured from Low level to material level
C	% Level - proportional percentage of measured level based on Low and High level setting

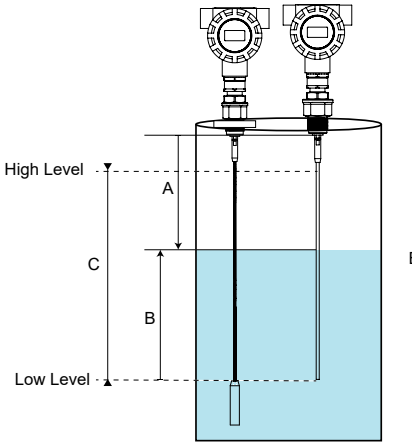

Displayed Measurements - Interface[1]

Measured Span Reference

A	Distance - measured from base of thread or bottom of flange to material level
B	Level - measured from Low level to material level
C	% Level - proportional percentage of measured level based on Low and High level setting

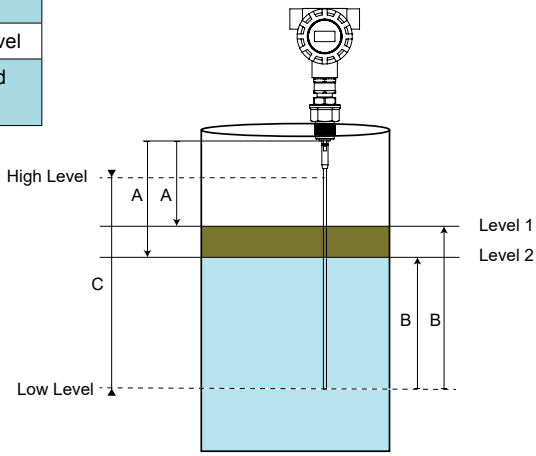

(1) Interface mode is only available with the Interface communications option (see Part Numbers)

HART Information / DD

HART Revision 7

DTM/DD files available at https://www.hawkmeasurement.com/downloads/software-and-drivers/

Supported hosts include PRM, Fieldmate and AMS. DD files for the 475 Communicator are available.

HART Variables

Variable	Function	Function (for Interface model type)
Primary	Level	Level 2
Secondary	Unfiltered echo distance	Level 1
Third	Echo signal size	Level 2 echo signal size
Fourth	Temperature	Temperature

HART Universal Command List

Command No.	Function
0	Read unique identifier
1	Read Primary Variable
2	Read current and percent of range
3	Read current and four predefined dynamic variables.
6	Write polling addr
7	Read loop configuration
8	Read Dynamic Variable Classifications
11	Read unique ident. Associated with tag
12	Read message
13	Read Tag, Description, Date
14	Read PV sensor information
15	Read output information
16	Read final assembly number
17	Write message
18	Write Tag, Description, Date
19	Write final assembly number
20	Read Long Tag

HART Common Practice List

Command No.	Function
34	Write Primary Variable Damping Value
35	Write Primary Variable Range Value
36	Set Primary Variable Upper Range Value
37	Set Primary Variable Lower Range Value
38	Reset Configuration Changed Flag
40	Enter/Exit Fixed Primary Variable Current Mode
44	Write Primary Variable Units
45	Trim Primary Variable Current Dac Zero
46	Trim Primary Variable Current Dac Gain
57	Read Unit Tag, Descriptor, Date
58	Write Unit Tag, Descriptor, Date
59	Write Number Of Response Preambles
109	Burst Mode Control
110	Read All Dynamic Variables

Status / Diagnostic Flags

Status / Diagnostic Flags
Device Malfunction (Fails safe status)
Configuration Changed
Cold Start
Output Current Fixed
Primary Variable Out of limits

Diagnostics

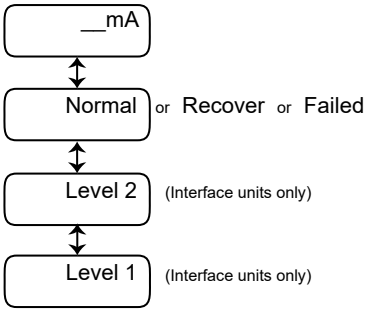

Autoset

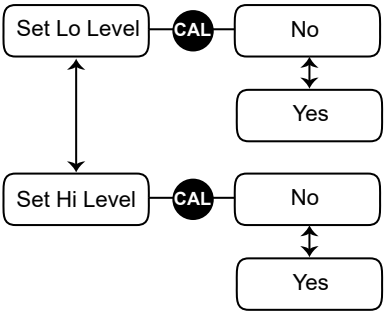

Setup

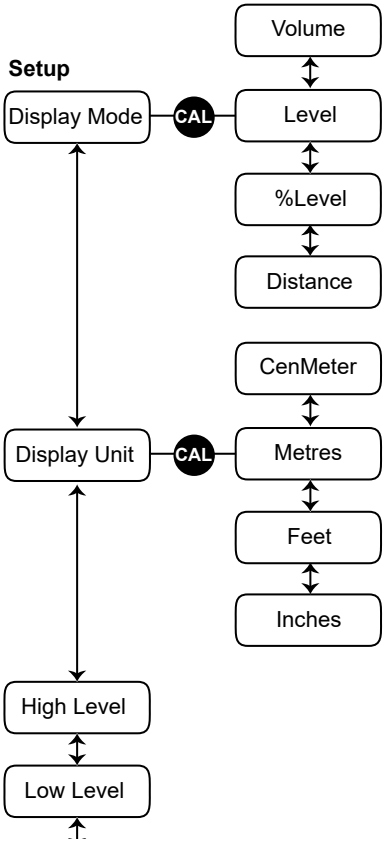

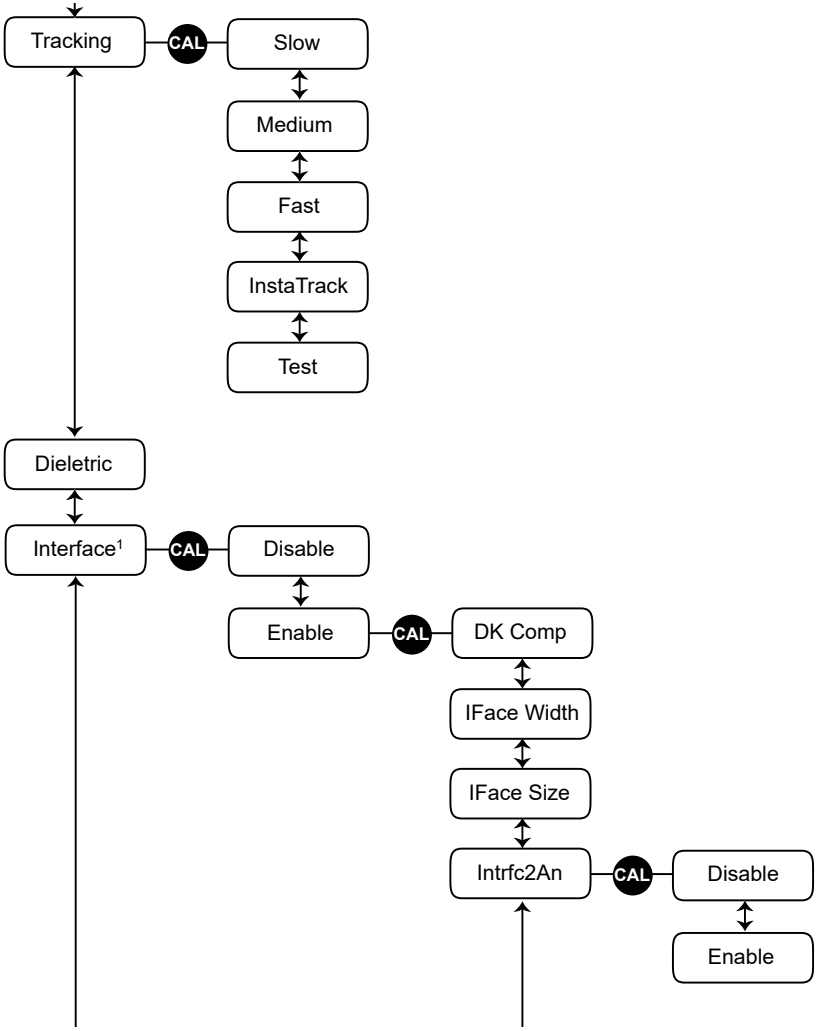
Tracking
CAL
Slow
Medium
Fast
InstaTrack
Test
Dieletric
Interface1
CAL
Disable
Enable
CAL
DK Comp
IFace Width
IFace Size
Intrfc2An
CAL
Disable
Enable

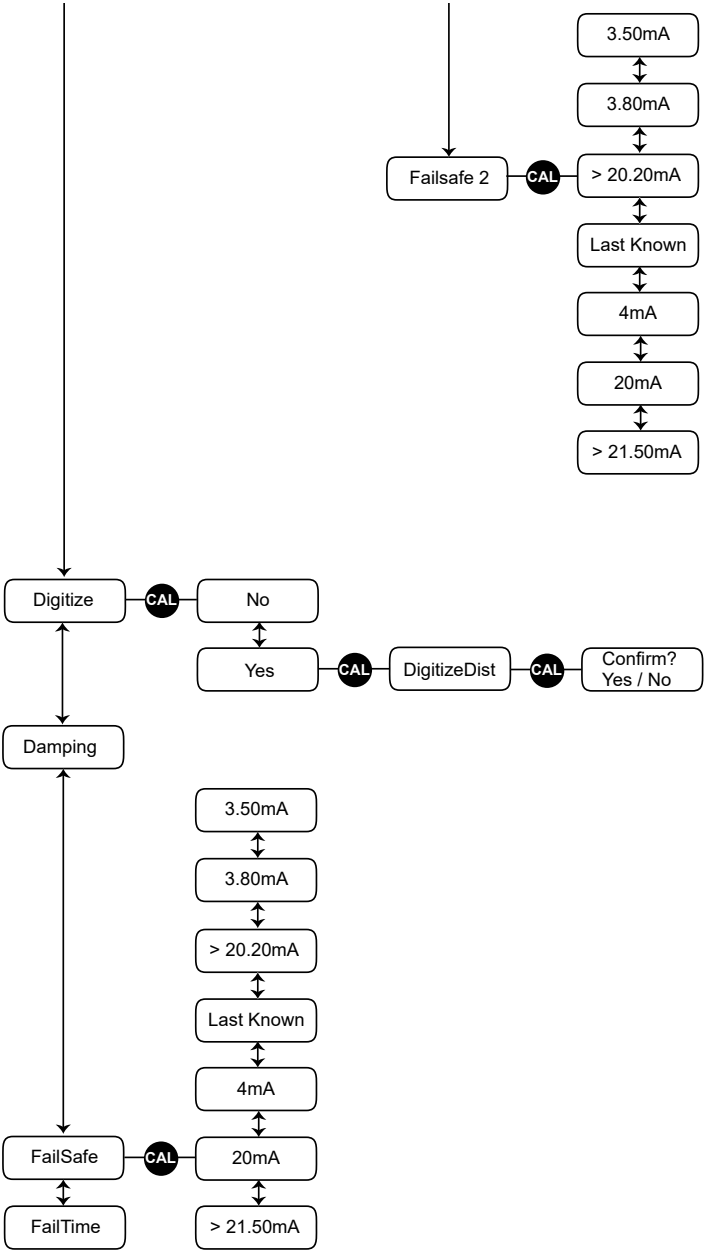
3.50mA
3.80mA
Failsafe 2
CAL
> 20.20mA
Last Known
4mA
20mA
> 21.50mA
Digitize
CAL
No
Yes
CAL
DigitizeDist
CAL
Confirm?
Yes / No
Damping
3.50mA
3.80mA
> 20.20mA
Last Known
4mA
FailSafe
CAL
20mA
FailTime
> 21.50mA

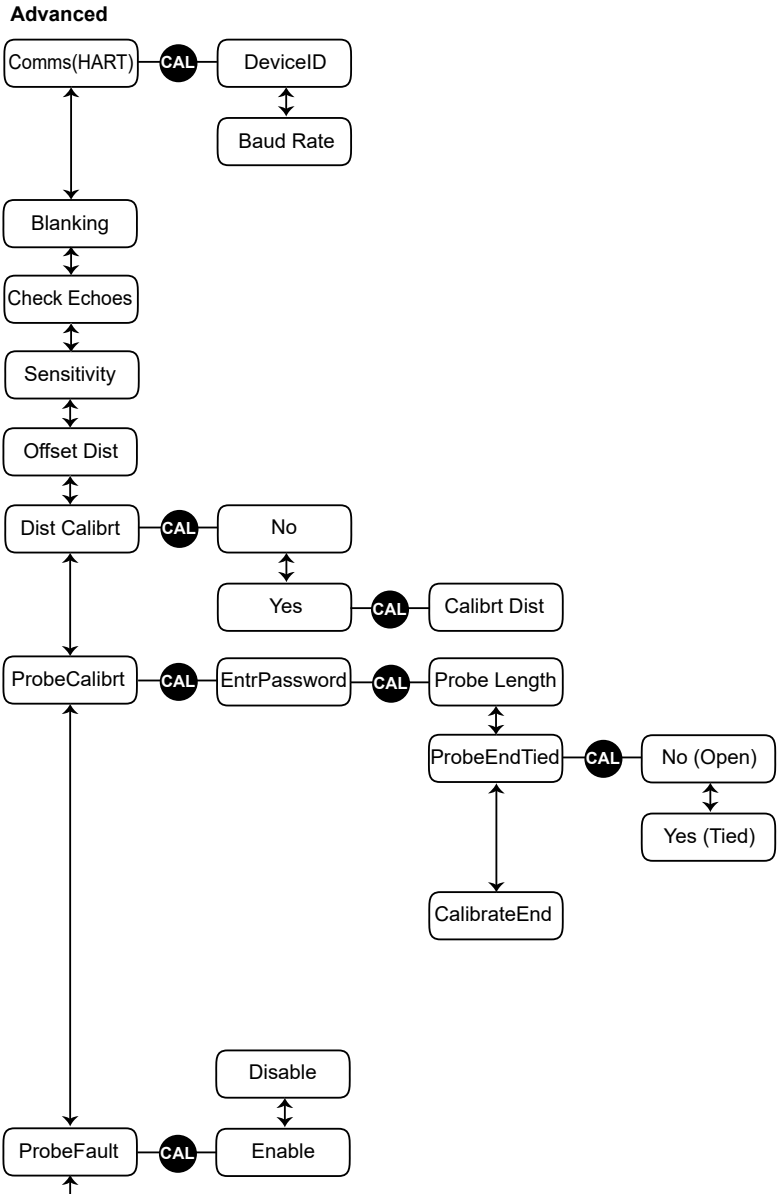
Advanced
Comms(HART)
CAL
DeviceID
Baud Rate
Blanking
Check Echoes
Sensitivity
Offset Dist
Dist Calibrt
CAL
No
Yes
CAL
Calibrt Dist
ProbeCalibrt
CAL
EntrPassword
CAL
Probe Length
ProbeEndTied
CAL
No (Open)
Yes (Tied)
CalibrateEnd
Disable
ProbeFault
CAL
Enable

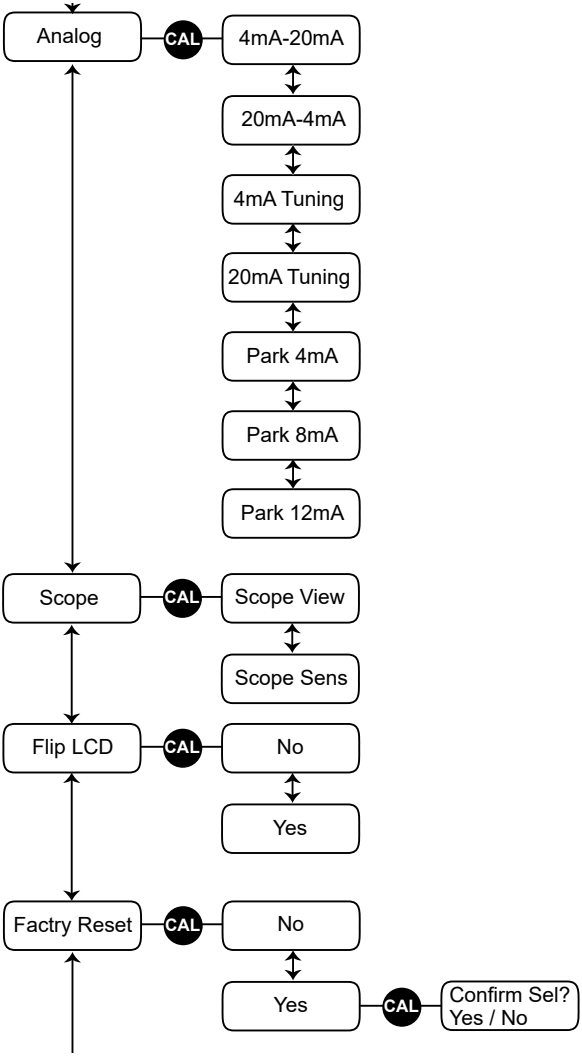
Analog
CAL
4mA-20mA
20mA-4mA
4mA Tuning
20mA Tuning
Park 4mA
Park 8mA
Park 12mA
Scope
CAL
Scope View
Scope Sens
Flip LCD
CAL
No
Yes
Factry Reset
CAL
No
Yes
CAL
Confirm Sel?
Yes / No

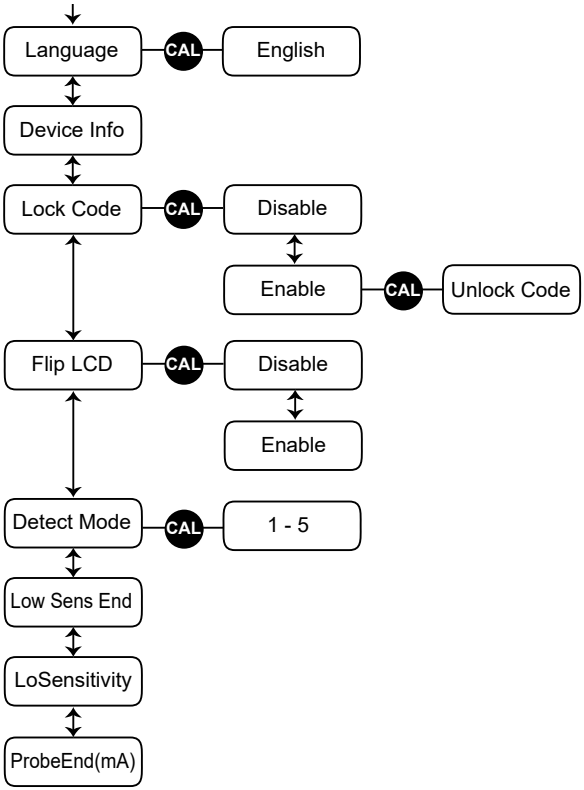
Language
CAL
English
Device Info
Lock Code
CAL
Disable
Enable
CAL
Unlock Code
Flip LCD
CAL
Disable
Enable
Detect Mode
CAL
1 - 5
Low Sens End
LoSensitivity
ProbeEnd(mA)

SILCommission

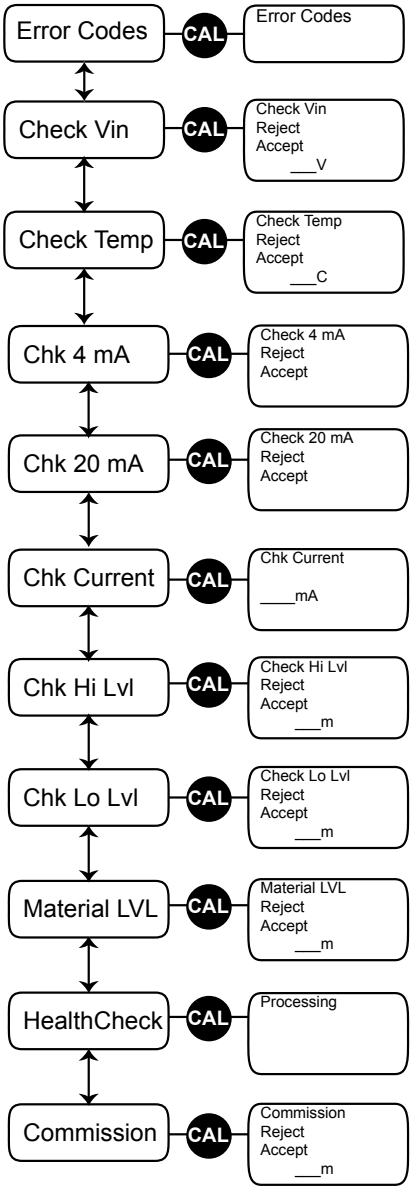

Failed codes

Error Code	Type	Description
Failed 01	Hardware	Pulse transmission error. If unit does not recover contact local representative for repair return
Failed 02	Hardware	Pulse transmission error. If unit does not recover contact local representative for repair return
Failed 03	Hardware	Pulse transmission error. If unit does not recover contact local representative for repair return
Failed 04	Hardware	Probe continuity error. Check probe is present or damaged. If unit does not recover contact local representative for repair return
Failed 05	Software	Memory corruption. Re-run Digitize routine. Perform Factory Reset and re-run Digitize routine. If unit does not recover contact local representative for repair return

General Troubleshooting

Problem	Check
Display is blank Unit continually re-starts	Check incoming power on loop is to specification. Check incoming power on loop is continuous. Bench test with new 24V supply.
Measurement is non-responsive (material touching probe)	Run Digitize routine. If routine has already been run, Lower Dielectric selection or increase Sensitivity parameter. Check unit status for 'Failsafe'. The unit will go to Failsafe if it cannot detect any reflections. Check the probe element for damage or excessive build up. Ensure mounting is correct to specification with good ground reference. Ensure probe is not touching the vessel. Place current meter in line with loop. Ensure the 4-20mA is proportional to level reading based on High and Low level.
Unit is indicating a material level while no material is present	**A) If the unit is indicating full / high** Ensure no structure is making contact with the probe. Check for build up bridging between the probe and vessel / nozzle Run Digitize routine while no material is contacting the probe. Set Display Mode to Distance, note the measurement. If distance is near high level use Blanking to eliminate reflection interference. Adjust High level to ensure it is not within the Blanking range. **B) If the unit is indicating other level** The unit should measure the end of probe while nothing is touching the probe. Run Digitize routine while no material is contacting the probe. Confirm 'Low Level' is set correctly. Ensure no structure is making contact with the probe. Check for excessive build up and clean the probe. Ensure mounting is correct to specification with good ground reference. Place current meter in line with loop. Ensure the 4-20mA is proportional to level reading based on High and Low level. Use 4mA and 20mA tuning to force the output reading to each value to ensure the current control is operating correctly.
PLC reading does not match reading on display	Connect a Multimeter in series with the powered loop. Compare the 'mA' diagnostic on the display with the mA reading on the loop. If these values do not match, disconnect the loop wires and measure the resistance across the loop. This should not exceed specification. Confirm High Level and Low Level are set to the same values in CGR and control system.

Troubleshooting (con't)

Unit measurement is locked at or near end of probe	The material touching the probe may not be generating a large enough reflection in the application conditions. Ensure unit is mounted as per specifications. Take note of the ground reference requirement. Ensure the probe is not making contact with the vessel. Use a minimum 2" / 50mm flange to improve signal transmission. Change unit Tracking to 'Test' mode to measure closest echo instead of largest. Increase Sensitivity.
The probe is too long	Non-hazardous rated units can have the probe length cut to requirement. For flexible probes release the cable weight by undoing grub screws. After adjusting the probe ensure the new probe length is recorded on site. Update ProbeCalibrt parameter to new length.
Adjusting / commissioning the unit without removing the lid	You will require a HART to PC connector and HAWK GosHawkII software. See CGR GosHawk user manual' for further information.
Digitize fails	The digitization process will fail if the unit cannot detect a measurable difference between the largest false reflection and the reflection generated by either the end of probe or the material touching the probe. Choose a lower Dielectric pre-set and re-run Digitize. Increase Sensitivity value and re-run Digitize. Ensure the Digitize distance is not greater than the material level. Ensure no structure is making contact with the probe. Check for excessive build up and clean the probe. Ensure mounting is correct to specification with good ground reference.
Digitize displays incorrect distance	If Digitize displays a closer distance than the material level / end of probe enter the distance to the correct material level. The unit will automatically eliminate the detected echo and find the correct level. If Digitize displays a longer distance than the material level the measured material may not be returning a large enough signal. Increase Sensitivity and change Tracking to 'Test' mode. Ensure unit has conforming ground reference. If Digitize displays a longer distance than the end of the probe length adjust see 'Measurement Accuracy' below or the 'ProbeLength' parameter in 'Advanced' menu if the Probe length has been modified.
Measurement accuracy	Material / Dielectric or environment can create small measurement inaccuracy. Run Dist Calibrt parameter in software to manually adjust measured distance to new value.

Centurion Guided Radar System

HART Type - 3/4" & 1" Threaded Units (mounting option TN07, TB07, TN10, TB10, Flanged)

Model

CGR2 2 wire Centurion Guided Radar

Communication

- H 4-20mA with HART
- L 4-20mA with HART and SIL2

Housing

- 1 Dual Chamber Aluminum Epoxy Painted with viewing window
- 2 Dual Chamber 316L Stainless Steel, with viewing window
- C Single Chamber 316L with viewing window[4]
- E Blind Housing (ABS Thermoplastic) with 800mm remote probe coaxial cable connection. Approval option XX only, M20 conduit only
- A Single Chamber Aluminum, powder coated with viewing window[4]
- B Single Chamber Aluminum powder coated, no viewing window[4]
- D Single Chamber 316L with no viewing window[4].

Conduit / Gland Entry

- 1 1/2" NPT
- 3 M20 x 1.5

Probe Type

- A04 4mm flexible cable
- A06 6mm flexible cable
- B04 4mm rigid probe
- B06 6mm rigid probe
- J04 Detached 4mm flexible cable
- J06 Detached 6mm flexible cable
- K04 Detached 4mm rigid probe
- K06 Detached 6mm rigid probe
- B11 11mm segmented rigid probe (TB10/TN10 mounting only). Requires B11 Probe Segments Accessory

Probe variant / materials

- S 316L
- L Monel 400
- P PTFE
- T 316L with CRN (Mounting TB/TN only)
- K Monel 400 with CRN (Mounting TB/TN only)

Mounting

- TN07 3/4" NPT Thread
- TB07 3/4" BSP Thread
- TN10 1" NPT Thread
- TB10 1" BSP Thread
- FXXX[1] Flanged Bush (replace XXX with 3 character Flanged Bush Code)

Process O-ring seal / Process Temperature

V1	FKM (Viton)	(-40°C to +80°C)	(-40°F to +176°F)
V4	FKM (Viton)	(-40°C to +150°C)	(-40°F to +302°F)
B1	NBR	(-40°C to +80°C)	(-40°F to +176°F)
E1	EPDM	(-40°C to +80°C)	(-40°F to +176°F)
E3	EPDM	(-40°C to +130°C)	(-40°F to +266°F)
M1	FFKM (Markez)	(-10°C to +80°C)	(+14°F to +176°F)
M4	FFKM (Markez)	(-10°C to +150°C)	(+14°F to +302°F)
M5	FFKM (Markez)	(-10°C to +200°C)	(+14°F to +392°F)
M6	FFKM (Markez)	(-5°C to +250°C)	(+23°F to +482°F) (Max Process Pressure 40 bar)
S1	Silicone	(-40°C to +80°C)	(-40°F to +176°F)

Process Pressure

- 1 6 bar
- 3 20 bar
- 4 40 bar
- 5 100 bar

Approval Standard

XX Not Required
1D IECEx Ex ia/db [ia Ga] IIC T6…T2 Ga/Gb
2D IECEx Ex ia tb [ia Da] IIIC T85°C…T250°C Da Db
1U FM XP Cl I, Div 1, Gp B-D with IS Probe Cl I, Div I, Gp A-D, T6...T2B, Ta = T* to 60°C; Cl. I Zone 0/1 AEx ia/db [ia Ga] IIC T6...T2 Ga/Gb
2U FM DIP-IS, Cl II, III, Div 1, Grp E, F and G, T6…T2B, Ta = T* to +60°C; Zone 20/21 AEx ia IIIC T85°C…T250°C Da; AEx tb IIIC T85°C Db, Ta = T* to +60°C
1C CSA XP Cl I, Div 1, Gp B-D with IS Probe Cl I, Div I, Gp A-D, T6...T2B[3]
2C CSA Ex ia/db IIC T6…T2 Ga/Gb[3]
3C CSA DIP-IS, Class II, III, Division 1, Groups E, F and G, T6…T2B[3]
4C CSA Ex ia IIIC T85°C…T250°C Da; Ex tb IIIC T85°C Db[3]
GP FM/CSA General Purpose
1A ATEX II 1/2 G Ex ia/db IIC T6…T2 Ga/Gb
2A ATEX II 1/2 D Ex ia IIIC T85°C…T250°C Da / Ex tb IIIC T85°C Db
3A ATEX II 3 G Ex ic/dc IIC T6… T2 Gc Tamb -40°C to 60°C
6A ATEX II 3 D Ex ia IIIC T85°C…T255°C Dc Tamb -40°C to 60°C, Ex tb IIIC T85°C Dc[5]
6A ATEX II 3 D Ex tc IIIC T85°C ... T250°C Dc Tamb -40°C to 60°C

Probe Length

Specify in cm

Option

H Interface Level Software (Leave blank if not required).

CGR2 H 1 3 B06 S TN10 B1 1 XX 200

Probe / Mounting Combination Table

Probe Code	Variant / Materials	Mounting	Flange Sizes[2] Min. Size	Max size	Max. Length
A04 / J04	S, L, P	TN07, TB07, FXXX	1", DN25, 25mm	4", DN100, 100mm	3800cm
A06 / J06	S, L, P	TN10, TB10	2", DN50, 50mm	4", DN100, 100mm	3800cm
B04 / K04	S, L	TN07, TB07, FXXX	1", DN25, 25mm	4", DN100, 100mm	400cm
B06 / K06	S, L	TN10, TB10	2", DN50, 50mm	4", DN100, 100mm	400cm
B11	S, L	TN10, TB10	2", DN50, 50mm	4", DN100, 100mm	600cm

[1]See Flanged Bush Code selection in Flange Table.
[2]HAWK Supplied Flanges. End user can use any appropriate flange with suitable bore hole.
[3]NPT conduit / cable thread only
[4]Hazardous Approval option 'XX, 6A' only [5]Housing Option 'A, B' only
**Refer to Safety Instructions

Centurion Guided Radar System

HART Type - 1.5" Threaded Units (mounting option TN15/TB15, Flanged)

Model

CGR2 2 wire Centurion Guided Radar

Communication

H 4-20mA with HART
L 4-20mA with HART and SIL2

Housing

1 Dual Chamber Aluminum, Epoxy Painted with viewing window
2 Dual Chamber 316L Stainless Steel with viewing window
A Single Chamber Aluminum, powder coated with viewing window[4]
B Single Chamber Aluminum, powder coated, no viewing window[4]
C Single Chamber 316L with viewing window[4]
D Single Chamber 316L with no viewing window[4]
E Blind Housing (ABS Thermoplastic) with 800mm remote probe coaxial cable connection. Approval option XX only, M20 conduit only

Conduit Gland Entry

1 1/2" NPT
3 M20 x 1.5

Probe Type

A08 8mm flexible cable
B08 8mm rigid probe
J08 Detached 8mm flexible cable
K08 Detached 8mm rigid probe

Probe variant / materials

S 316L
L Monel 400
P PTFE
T 316L with CRN (Mounting TB/TN only)
K Monel 400 with CRN (Mounting TB/TN only)

Mounting

TN15 1.5" NPT Thread
TB15 1.5" BSP Thread
FXXX[1] Flanged Bush (replace XXX with 3 character Flanged Bush Code)

Process O-ring seal / Process Temperature

V1	FKM (Viton)	(-40°C to +80°C)	(-40°F to +176°F)
V3	FKM (Viton)	(-40°C to +130°C)	(-40°F to +266°F)
B1	NBR	(-40°C to +80°C)	(-40°F to +176°F)
E1	EPDM	(-40°C to +80°C)	(-40°F to +176°F)
E3	EPDM	(-40°C to +130°C)	(-40°F to +266°F) (Maximum Process Pressure 6 bar)
S1	Silicone	(-40°C to +80°C)	(-40°F to +176°F)
S3	Silicone	(-40°C to +130°C)	(-40°F to +266°F) (Maximum Process Pressure 6 bar)

Process Pressure

1 6 bar (87 psig)
3 20 bar (290 psig)
4 40 bar (580 psig)

Approval Standard

XX Not Required
1D IECEx Ex ia/db [ia Ga] IIC T6…T2 Ga/Gb
2D IECEx Ex ia tb [ia Da] IIIC T85°C…T250°C Da Db
1U FM XP Cl I, Div 1, Gp B-D with IS Probe Cl I, Div I, Gp A-D, T6...T2B, Ta = T* to 60°C; Cl. I Zone 0/1 AEx ia/db [ia Ga] IIC T6...T2 Ga/Gb
2U FM DIP-IS, Cl II, III, Div 1, Grp E, F and G, T6…T2B, Ta = T* to +60°C; Zone 20/21 AEx ia IIIC T85°C…T250°C Da; AEx tb IIIC T85°C Db, Ta = T* to +60°C
1C CSA XP Cl I, Div 1, Gp B-D with IS Probe Cl I, Div I, Gp A-D, T6...T2B[3]
2C CSA Ex ia/db IIC T6…T2 Ga/Gb[3]
3C CSA DIP-IS, Class II, III, Division 1, Groups E, F and G, T6…T2B[3]
4C CSA Ex ia IIIC T85°C…T250°C Da; Ex tb IIIC T85°C Db[3]
GP FM/CSA General Purpose
1A ATEX II 1/2 G Ex ia/db IIC T6…T2 Ga/Gb
3A ATEX II 3 G Ex ic/dc IIC T6… T2 Gc Tamb -40°C to 60°C
6A ATEX II 3 D Ex ia IIIC T85°C…T255°C Dc Tamb -40°C to 60°C, Ex tb IIIC T85°C Dc[5]
6A ATEX II 3 D Ex tc IIIC T85°C ... T250°C Dc Tamb -40°C to 60°C

Probe Length

Specify in cm

Option

H Interface Level Software (Leave blank if not required).

CGR2 H 1 3 B08 S TN15 B1 1 XX 200

Probe / Mounting Combination Table

Probe Code	Variant / Materials	Mounting	Flange Sizes[2] Min. Size	Flange Sizes[2] Max size	Max. Length
A08 / J08	S, L, P	TN15, TB15, FXXX	2”, DN50, 50mm	4”, DN100, 100mm	3800cm
B08 / K08	S, L	TN15, TB15, FXXX	2”, DN50, 50mm	4”, DN100, 100mm	400cm

[1]See Flanged Bush Code selection in Flange Table.
[2]HAWK Supplied Flanges. End user can use any appropriate flange with suitable bore hole.
[3]NPT conduit / cable thread only
[4]Hazardous Approval option 'XX, 6A' only
[5]Housing Option 'A, B' only
**Refer to Safety Instructions

Mounting Flanges

Threaded Flanges

Model

FLA -

Flange Size

1	1” or DN25 or 25mm
H	1 1/2” or DN40 or 40mm
2	2” or DN50 or 50mm
K	2 1/2” or DN65 or 65mm
3	3” or DN80 or 80mm
L	3 1/2” (ANSI ONLY)
4	4” or DN100 or 100mm

Flange Type

A1	ANSI B16.5 150LB FLANGE
A3	ANSI B16.5 300LB FLANGE
A6	ANSI B16.5 600LB FLANGE
A9	ANSI B16.5 900LB FLANGE
AA	ANSI B16.5 1500LB FLANGE
AB	ANSI B16.5 2500LB FLANGE
D6	DIN2527 PN6 FLANGE
D0	DIN2527 PN10 FLANGE
D1	DIN2527 PN16 FLANGE
D2	DIN2527 PN25 FLANGE
D4	DIN2527 PN40 FLANGE
J5	JIS 5K FLANGE
J0	JIS 10K FLANGE
J1	JIS 16K FLANGE
J2	JIS 20K FLANGE
J4	JIS 40K FLANGE
S1	AS 2129 Table D
S2	AS 2129 Table E
S3	AS 2129 Table F
S4	AS 2129 Table H

-

Material

SS SS316L

-

Thread Type

TB07	3/4” BSP THDs
TB10	1” BSP THDs
TB15	1 1/2” BSP THDs
TN07	3/4” NPT THDs
TN10	1” NPT THDs
TN15	1 1/2” NPT THDs

FLA - 2 A1 - SS - TB15

Flanged Bush

Model

F

Flange Size

1	1” or DN25 or 25mm
H	1 1/2” or DN40 or 40mm
2	2” or DN50 or 50mm
K	2 1/2” or DN65 or 65mm
3	3” or DN80 or 80mm
L	3 1/2” (ANSI ONLY)
4	4” or DN100 or 100mm

Flange Type

A1	ANSI B16.5 150LB FLANGE
A3	ANSI B16.5 300LB FLANGE
A6	ANSI B16.5 600LB FLANGE
A9	ANSI B16.5 900LB FLANGE
AA	ANSI B16.5 1500LB FLANGE
AB	ANSI B16.5 2500LB FLANGE
D6	DIN2527 PN6 FLANGE
D0	DIN2527 PN10 FLANGE
D1	DIN2527 PN16 FLANGE
D2	DIN2527 PN25 FLANGE
D4	DIN2527 PN40 FLANGE
J5	JIS 5K FLANGE
J0	JIS 10K FLANGE
J1	JIS 16K FLANGE
J2	JIS 20K FLANGE
J4	JIS 40K FLANGE
S1	AS 2129 Table D
S2	AS 2129 Table E
S3	AS 2129 Table F
S4	AS 2129 Table H

F 2 D4

Accessories

Probe Type 'B11' Segmented Probe Pieces

CGR-B11SEG-S-XX-L=	L = Specify length of piece in cm	Material 316L. No centering disc
CGR-B11SEG-S-CD-L=	L = Specify length of piece in cm	Material 316L. With centering disc

Tank Fastening Kits For Probes

Flexible Probes (316L)

CGR-A0X-WL-SS

Rigid Probes (316L)

CGR-B0X-PL-SS

Centering Discs

CGR-CDAAXX-11-PK	Centering Disc Kit For 11mm Probe (PEEK)
CGR-CDAAXX-11-PT	Centering Disc Kit For 11mm Probe (PTFE)
CGR-CDAAXX-11-S6	Centering Disc Kit For 11mm Probe (316L)
CGR-CDAAXX-11-MN	Centering Disc Kit For 11mm Probe (Monel 400)

Electronics

Power

• 2 wire loop powered • 24VDC (14 to 28VDC)

Power Consumption

• <500mW @ 24VDC

Analog Output

• 14V @ 0 Ohm • 24V @ 500 Ohms
• 19V @ 250 Ohms • Current park at 4mA, 8mA, 12mA

Communications

• HART (Revision 7)
• GosHawkII via HART. Full parameter list

Maximum Range

• Flexible cable probe: 38m (124ft)
• Rigid probe: 4m (13ft 1in)
• Segmented rigid probe: 6m (19ft 8in) (B11 type)

Minimum Range (Blanking)

• >=150mm (6")

Dielectric Range

• ≥ 1.5

Frequency

• 2.2 GHz

Resolution

• Analog: 1uA
• Display: 1.0mm

Accuracy[1]

• +/- 3mm

Measurements per second

• 3

Response Time

• <1 second (based on application selection)

Sum of non linearity, non repeatability, hysteresis

• Analog +/- 0.02%

Repeatability

• +/- 3mm

Memory

• Non-Volatile (No backup battery required) >10 years data retention

Operating Temperature (Electronics)

• -40ºC to +80ºC (-40 to +176ºF)

Display

• 4 line graphic display (128 x 64 pixels)

Language

• English

Configuration

• 4 button (Up, Down, Cal, Run), GosHawkII via HART, HART 7 DD/DTM

Approvals

• **Certificate No. IECEx TSA 14.0037X**
IECEx Zone 0/1, Zone 1
Ex ia/d [ia Ga] IIC T6...T2 Ga/Gb Tamb = -40°C to +60°C
IECEx Zone 20/21
Ex ia tb [ia Da] IIIC T85°C...T255°C Da Db Tamb = -40°C to +60°C

• **Certificate No. FM18US0194X**
FM Class I Div 1 & Class I, Zone 0/1
XP Cl. I Div 1 Gp B-D with IS Probe Cl I, Div I, Gp A-D, T6...T2B Ta = -**°C to +60°C
Cl I, Zone 0/1 AEx ia/db IIC T6...T2 Ga/Gb Ta = -**°C to +60°C
FM Class II,III Div 1 & Zone 20/21
DIP-IS Class II, III, Division 1, Groups E,F and G T6...T2B Ta = -**°C to +60°C
Zone 20/21 AEx ia IIIC T85°C...T255°C Da; AEx tb IIIC T85°C Db, Ta = -**°C to +60°C

• **Certificate No. FM18CA0091X**
CSA Class I Div 1
XP-AIS Cl. I Div 1 Grp B-D with IS Probe Cl I, Div I, GP A-D, T6...T2B Ta = -**°C to +60°C
CSA Class I, Zone 0/1
Ex ia/db IIC T6...T2 Ga/Gb Ta = -**°C to +60°C
CSA Class II,III Div 1
DIP-IS Cl. II,III Div 1 Groups E, F and G T6...T2B Ta = -**°C to +60°C
CSA Zone 20/21
Ex ia IIIC T85°C...T250°C Da; Ex tb T85°C, Db Ta = -**°C to +60°C

• **Certificate No. FM18ATEX0046X**
ATEX Ex II 1/2 G Ex ia/db IIC T6...T2 Ga/Gb Ta = -**°C to +60°C
ATEX Ex II 1/2 D Ex ia IIIC T85°C…T250°C Da; Ex tb IIIC T85°C Db Ta = -**°C to +60°C

• **Certificate No. FM18NUS0014**
FM General Purpose
FM Class 3810: 2018, ANSI/ISA 61010-1: 2012, ANSI/NEMA 250:2003, ANSI/IEC 60529:2004

• **Certificate No. FM18NCA0005**
CSA General Purpose
CSA-C22.2 No. 94:2011, CSA-C22.2 No. 60529:2010, CAN/CSA-C22.2 No. 61010-1:2012

• **Self Declaration**
ATEX II 3D Ex ia IIIC T85°C… T255°C Dc Tamb -40°C to 60°C, Ex tb IIIC T85°C Dc
ATEX II 3 G Ex ic/dc IIC T6… T2 Gc Tamb -40°C to 60°C
ATEX II 3 D Ex tc IIIC T85°C ... T250°C Dc Tamb -40°C to 60°C

SIL Rating

• **Certificate No. 968/FSP 1375.01/18**
• SIL2 • SIL3 (multi channel)

[1]*Accuracy dielectric & material dependent*

Enclosure

Type

- Dual Chamber with viewing window
- Single Chamber with or without viewing window

Material

- Die-cast Copper-Free Aluminum, Epoxy Painted
- 316L Stainless
- Aluminum, powder coated

Cable Entries

- 1/2" NPT
- M20 x 1.5

IP Rating

- NEMA 4X
- IP66

Probe

Probe Size / Wetted Materials

- 4mm SS316L / Monel rod
- 4mm DIN3055 (7x7 strand) SS316L flexible cable / PTFE coated
- 6mm SS316L / Monel rod
- 6mm DIN3055 (7x7 strand) SS316L flexible cable / PTFE coated
- 8mm SS316L / Monel rod
- 8mm DIN3055 (7x7 strand) SS316L flexible cable / PTFE coated
- 11mm SS316L / Monel 400 rod

Wetted Materials[2]

- TN07 / TB07 / TN10 / TB10 / Flanged SS 316L, PEEK
- TN15 / TB15 / Flanged - SS 316L, PTFE, GF25

Probe O-Ring Seals / Process Temperature*

• FKM (Viton)	-40°C to +150°C	(-40°F to +302°F)
• EPDM	-40°C to +130°C	(-40°F to +266°F)
• FFKM (Markez)	-10°C to +200°C	(+14°F to +392°F)
• FFKM (Markez)	-5°C to +250°C	(+23°F to +482°F)
• Silicone	-40°C to +80°C	(-40°F to +176°F)
• Silicone	-40°C to +130°C	(-40°F to +266°F)
• NBR	-40°C to +80°C	(-40°F to +176°F)

Process Connections

- 3/4" NPT • 1" NPT • 1.5" NPT
- 3/4" BSP • 1" BSP • 1.5" BSP
- Threaded Flange
- Flanged Bush

Process Pressure

- -1 to 100 BAR

Tensile Load (flexible cable probes)

- Probe Type: A04 / J04 0.5 ton
- Probe Type: A06 / J06 1.0 ton
- Probe Type: A08 / J08 4.0 ton

Lateral Load (rigid probes)

- Probe Type: B04 / K04 1 Nm
- Probe Type: B06 / K06 3 Nm
- Probe Type: B08 / K08 8 Nm
- Probe Type: B11 11 Nm

Probe Length	Max	Min
• Probe Type: A04 / J04	3800cm	100cm
• Probe Type: A06 / J06	3800cm	100cm
• Probe Type: A08 / J08	3800cm	100cm
• Probe Type: B04 / K04	400cm	20cm
• Probe Type: B06 / K06	400cm	20cm
• Probe Type: B08 / K08	400cm	20cm
• Probe Type: B11	600cm	20cm

[2] *PEEK or PTFE/GF25 probe entry*

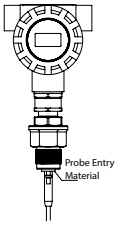

Electromagnetic Compatibility

CAN ICES-3(A)/NMB-3(A)

This device complies with Part 15, Subpart B Class A of the FCC Rules. Operation is subject to the following two conditions: (1) This device may not cause harmful interference, and (2) this device must accept any interference received, including interference that may cause undesired operation.

Note: This equipment has been tested and found to comply with the limits for a Class A digital device, pursuant to part 15 of the FCC rules. These limits are designed to provide reasonable protection against harmful interference when the equipment is operated in a commercial environment. This equipment generates, uses and can radiate radio frequency energy and, if not installed and used in accordance with the instruction manual, may cause harmful interference to radio communications. Operation of this equipment in a residential area is likely to cause harmful interference in which case the user will be required to correct the interference at his own expense.

Ordering Instructions

Threaded unit type

Assemble part number taking note of the valid combinations and exclusions for the full system.
The unit is ordered as a single line item. For example:

CGR2H13B08STB15B11XX200

Flanged type - Threaded flange

Assemble part number taking note of the valid combinations and exclusions for the full system. The unit and the threaded flange are ordered as separate line items. For example:

CGR2H13B08S**TN15**B11XX200
FLA-FA4-SS-**TN15**
or
CGR2H13B08S**TN07**B11XX200
FLA-FA1-SS-**TN07**

Flanged Bush type

Assemble part number taking note of the valid combinations and exclusions for the full system.
In the Mounting part code enter 4 character flanged bush code from the table. All flanged bush have F as the first character. For example:

CGR2H13B08S**F4A1**B11XX200

All company or product names are registered trademarks or trademarks of their respective owners.

Hawk Measurement Systems
(Head Office)
15 - 17 Maurice Court
Nunawading VIC 3131, AUSTRALIA
Phone: +61 3 9873 4750
Fax: +61 3 9873 4538
info@hawk.com.au

Hawk Measurement
5010 Gateway Drive, Medina,
OH 44256, USA
Phone: +1 888 HAWKLEVEL (1-888-429-5538)
Phone: +1 978 304 3000 / +1 877-356-5463
Fax: +1 978 304 1462 / +1 330-331-7172
info@hawkmeasurement.com

For more information and global representatives: **www.hawkmeasurement.com**

DOC-CGR-HART-MAN Rev. 1.40 0723